Scilab Manual for Digital System Design Lab by Dr Ravindra Patil Electronics and Telecommunication Engineering M.H. Saboo Siddik College of Engineering[1]

Solutions provided by
Dr Ravindra Patil
Electronics and Telecommunication Engineering
University Of Mumbai

November 24, 2026

[1]Funded by a grant from the National Mission on Education through ICT, http://spoken-tutorial.org/NMEICT-Intro. This Scilab Manual and Scilab codes written in it can be downloaded from the "Migrated Labs" section at the website http://scilab.in

Contents

List of Scilab Solutions 3

1 Design and simulate basic gates: NOT ,AND,OR,NOR,NAND,EXOR 7

2 Design and simulate AND, OR, NOT, EXOR gates using Universal gates: NAND and NOR. 17

3 Design and simulate digital circuits to perform Binary to Gray and Gray to Binary operations. 30

4 Design and simulate Magnitude Comparator. 34

5 Design and simulate parity generator and detector. 38

6 Design and simulate Half adder, Full adder Circuits 40

7 Design and simulate Half subtractor and Full subtractor circuits. 44

8 Design and simulate encoder and decoder circuits. 47

9 Design and simulate decoder circuits. 50

10 Design and simulate 2:1,4:1 Multiplexer. 52

11 Design and simulate 1:2. 1:4De Multiplexer. 57

12 Design and simulate SR and D types of flip flops. 61

List of Experiments

List of Figures

1.1 AND GATE 8
1.2 AND GATE 8
1.3 OR GATE 9
1.4 OR GATE 10
1.5 NOT GATE 11
1.6 NOT GATE 11
1.7 NOR GATE 12
1.8 NOR GATE 13
1.9 XOR GATE 14
1.10 XOR GATE 14
1.11 NAND GATE 15
1.12 NAND GATE 16

2.1 AND GATE USING NAND 18
2.2 AND GATE USING NAND 18
2.3 NOT GATE USING NAND GATE 19
2.4 NOT GATE USING NAND GATE 19
2.5 OR GATE USING NAND GATE 20
2.6 OR GATE USING NAND GATE 20
2.7 NOR GATE USING NAND GATE 21
2.8 NOR GATE USING NAND GATE 22
2.9 XOR GATE USING NAND GATE 22
2.10 XOR GATE USING NAND GATE 23
2.11 NOT GATE USING NAND GATE 23
2.12 NOT GATE USING NAND GATE 24
2.13 OR GATE USING NOR GATE 25
2.14 OR GATE USING NOR GATE 25
2.15 AND GATE USING NORGATE 26
2.16 AND GATE USING NORGATE 26

2.17 NAND GATE USING NOR GATE 27
2.18 NAND GATE USING NOR GATE 28
2.19 XOR GATE USING NOR GATE 28
2.20 XOR GATE USING NOR GATE 29

3.1 Binary to Gray code Converter 31
3.2 Binary to Gray code Converter 31
3.3 Binary to Gray code Converter 32
3.4 gray to binary code conversion 32
3.5 gray to binary code conversion 33
3.6 gray to binary code conversion 33

4.1 One bit Comparator 35
4.2 One bit Comparator 35
4.3 two bit comparator 36
4.4 two bit comparator 36
4.5 two bit comparator 37

5.1 Parity Generator 39
5.2 Parity Generator 39

6.1 Half Adder 41
6.2 Half Adder 41
6.3 Full Adder 42
6.4 Full Adder 42
6.5 Full Adder 43

7.1 Half Subtractor 45
7.2 Half Subtractor 45
7.3 Full Subtractor 46
7.4 Full Subtractor 46

8.1 Four as Two bit encoder 48
8.2 Eight AS TO THREE BIT ENCODER 48
8.3 Eight AS TO THREE BIT ENCODER 49
8.4 Eight AS TO THREE BIT ENCODER 49

9.1 TWO BIT DECODER 51
9.2 TWO BIT DECODER 51

10.1 TWO AS TO ONE MULTIPLEXER 53
10.2 TWO AS TO ONE MULTIPLEXER 53
10.3 Four as to one Multiplexer 54
10.4 Four as to one Multiplexer 54
10.5 Four as to one Multiplexer 55
10.6 Four as to one Multiplexer 55
10.7 Four as to one Multiplexer 56

11.1 One as to Two DeMultiplexer 58
11.2 One as to Two DeMultiplexer 58
11.3 One as to Two DeMultiplexer 59
11.4 one as to Four Demux 59
11.5 one as to Four Demux 60
11.6 one as to Four Demux 60

12.1 SR FF 62
12.2 SR FF 62
12.3 D FF 63
12.4 D FF 63

Experiment: 1

Design and simulate basic gates: NOT ,AND,OR,NOR,NAND,EXOR

This code can be downloaded from the website wwww.scilab.in

This code can be downloaded from the website wwww.scilab.in

This code can be downloaded from the website wwww.scilab.in

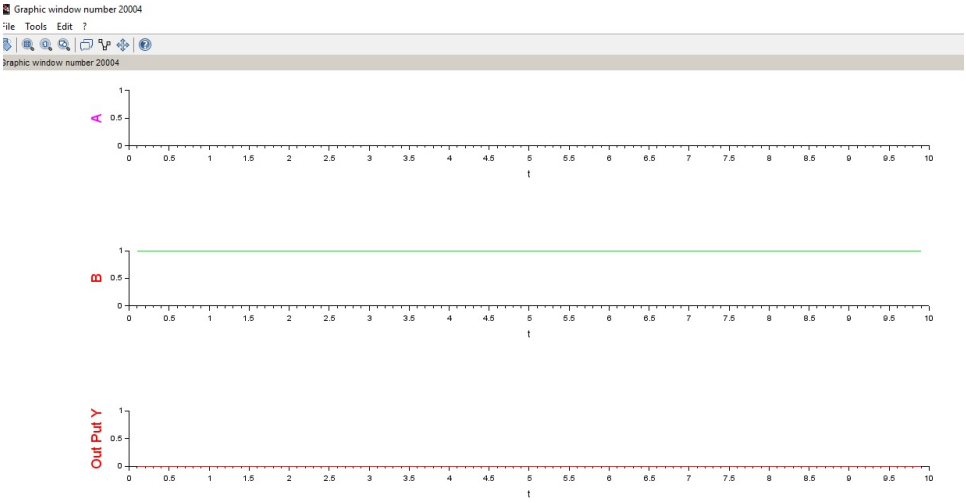

Figure 1.1: AND GATE

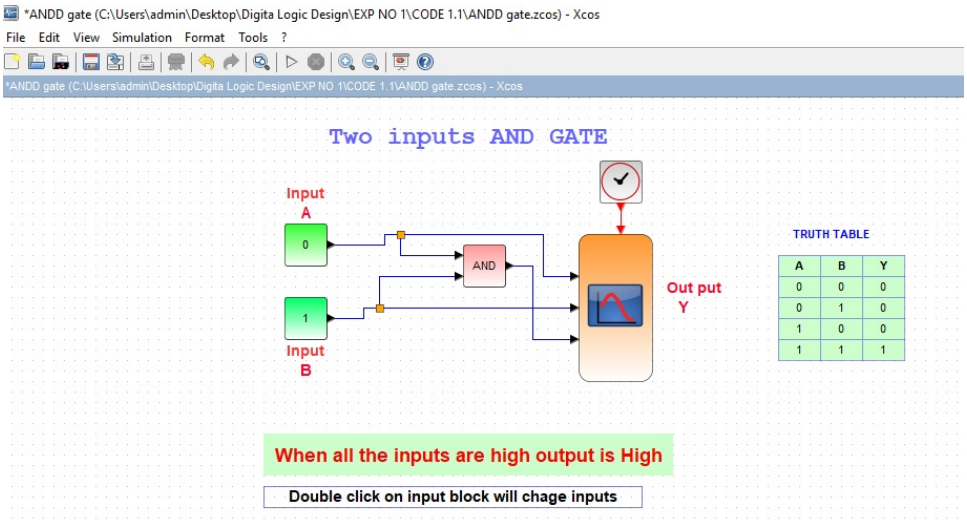

Figure 1.2: AND GATE

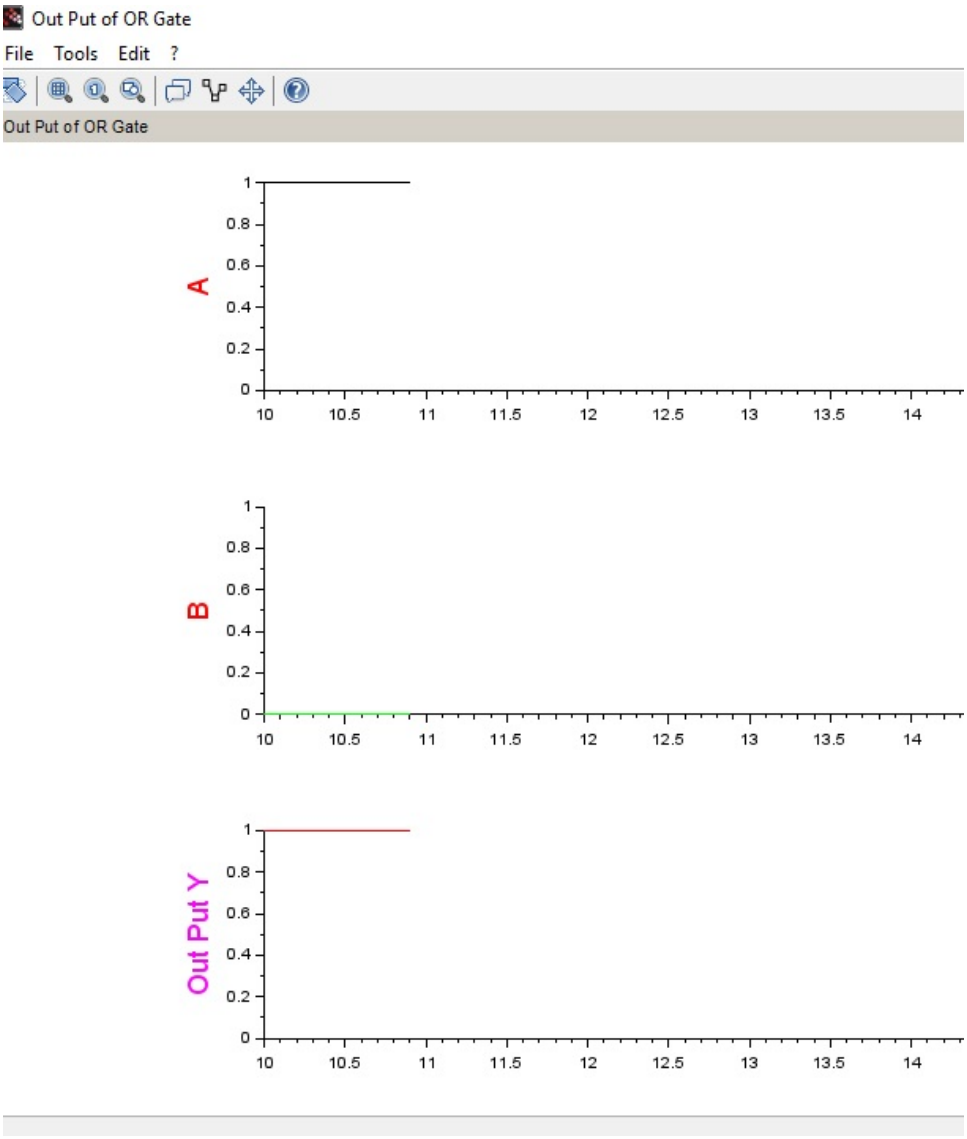

Figure 1.3: OR GATE

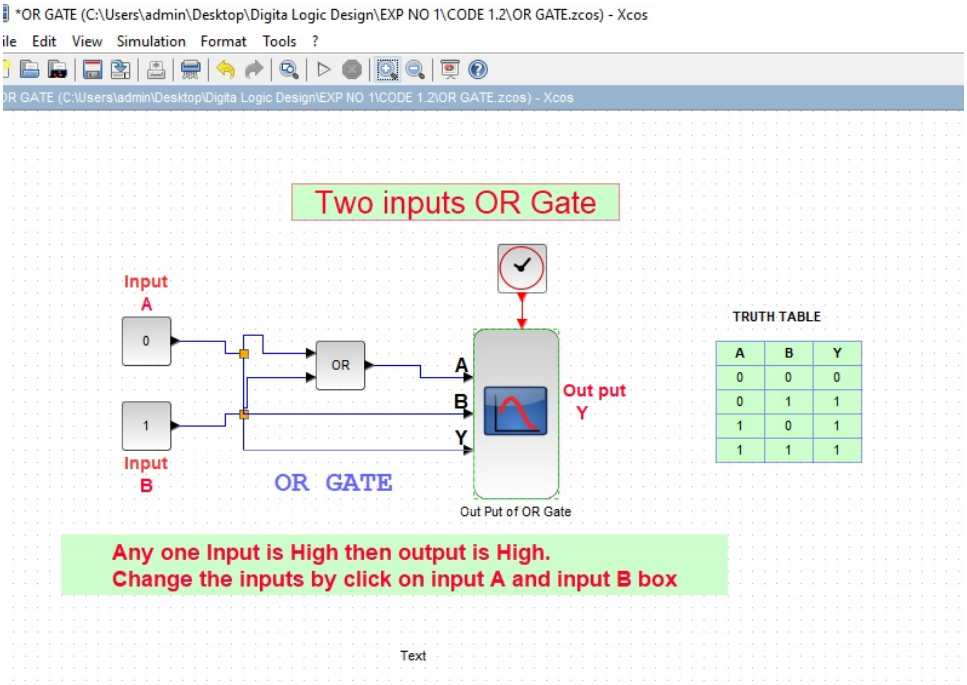

Figure 1.4: OR GATE

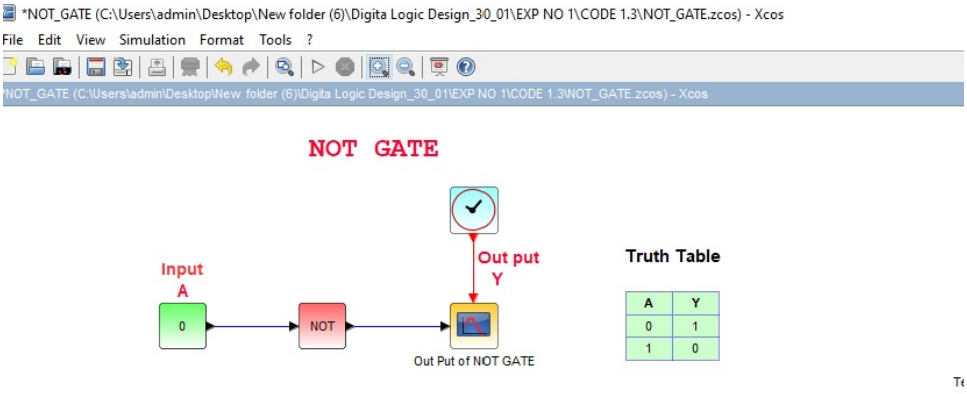

Figure 1.5: NOT GATE

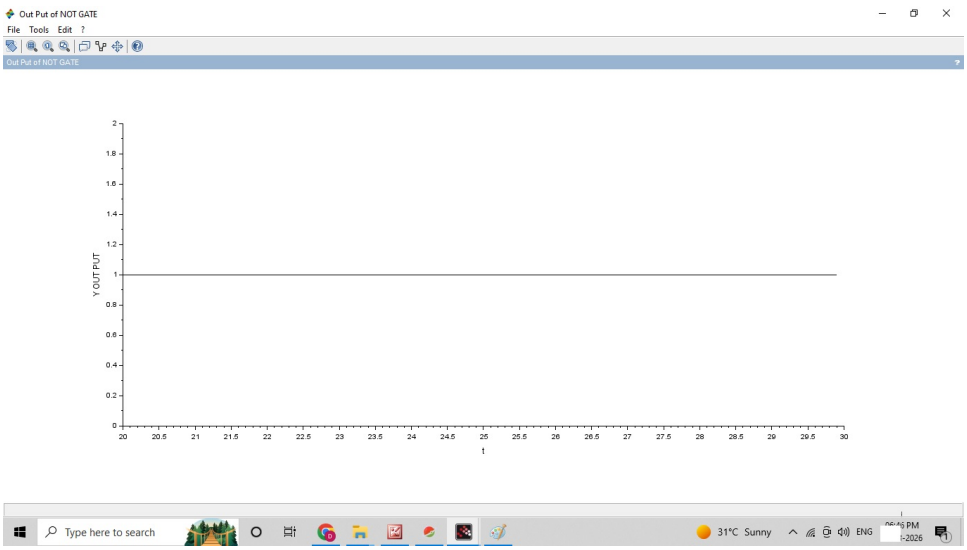

Figure 1.6: NOT GATE

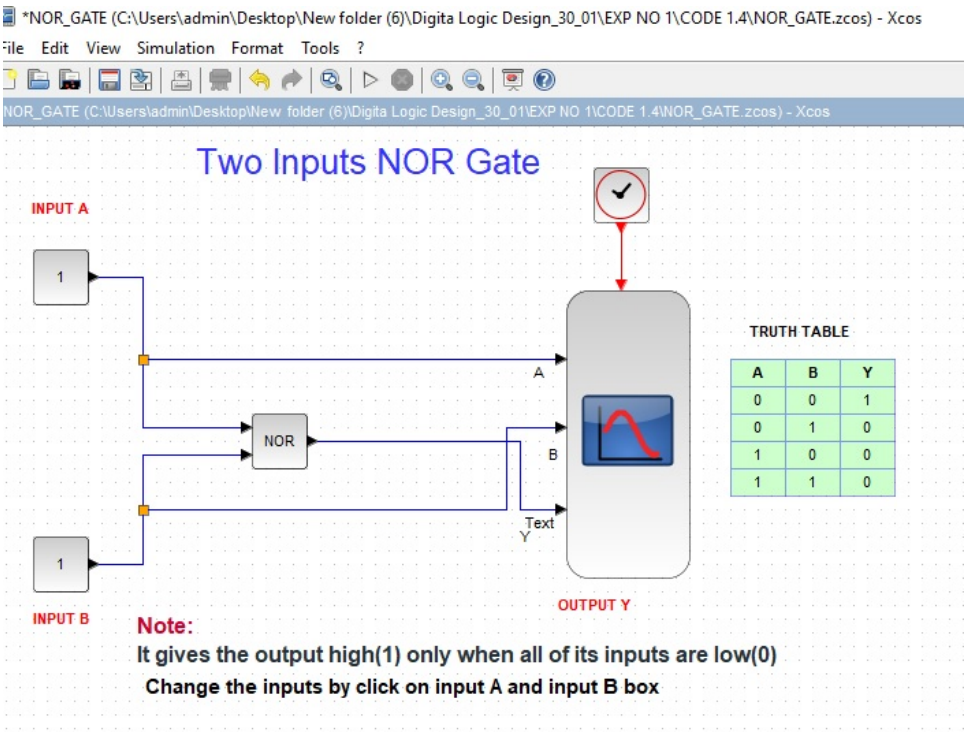

Figure 1.7: NOR GATE

This code can be downloaded from the website wwww.scilab.in

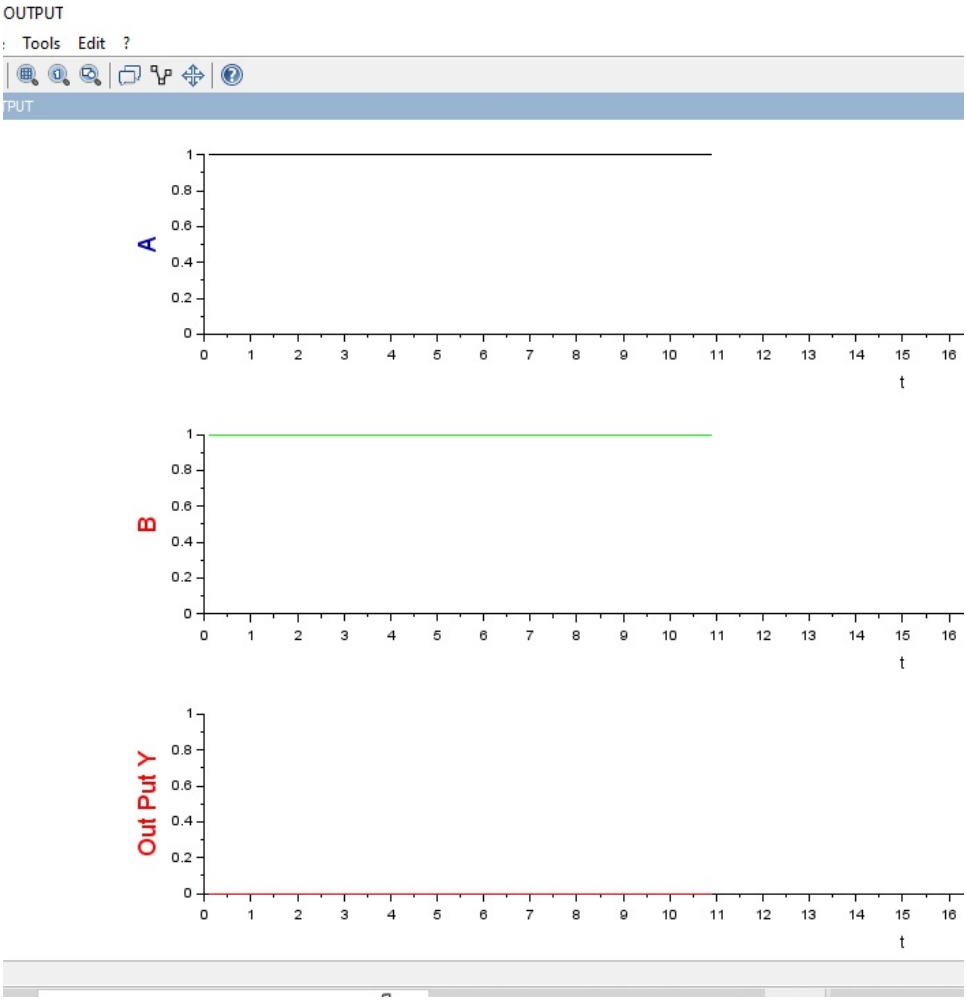

Figure 1.8: NOR GATE

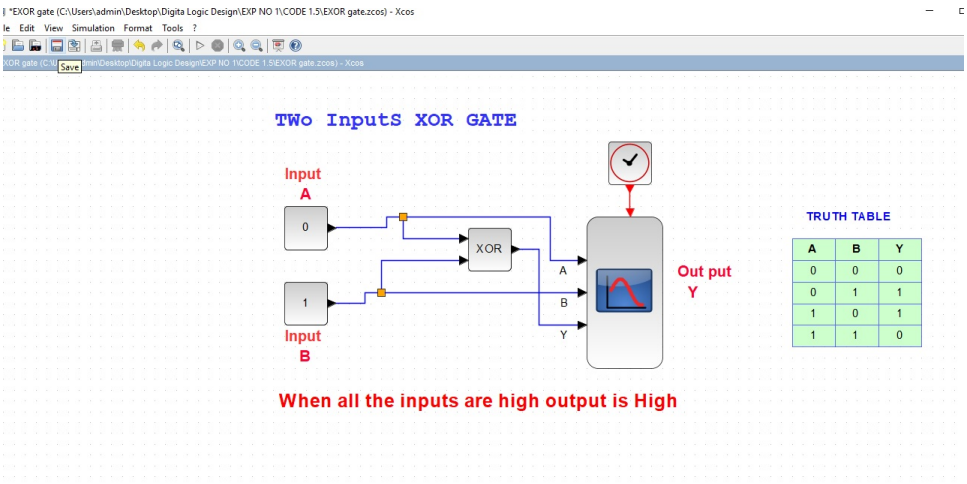

Figure 1.9: XOR GATE

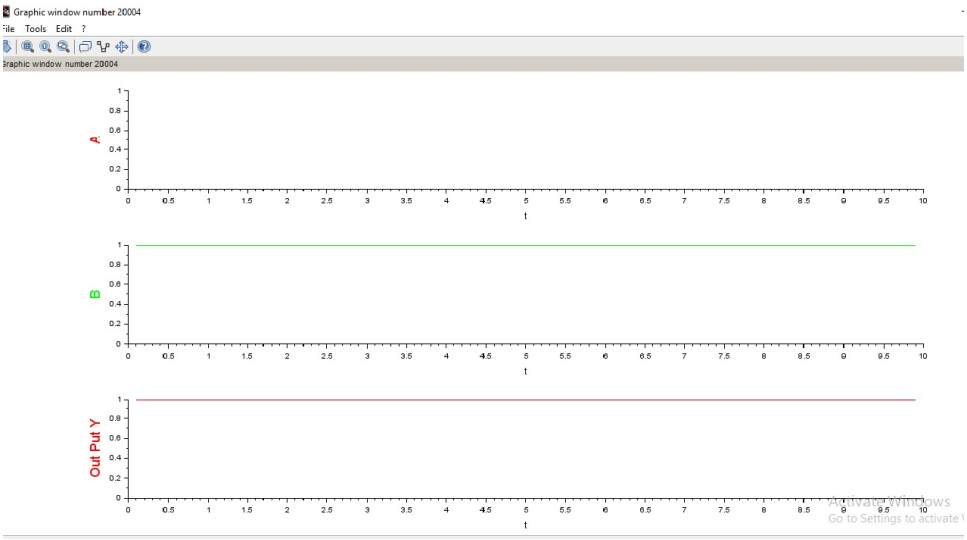

Figure 1.10: XOR GATE

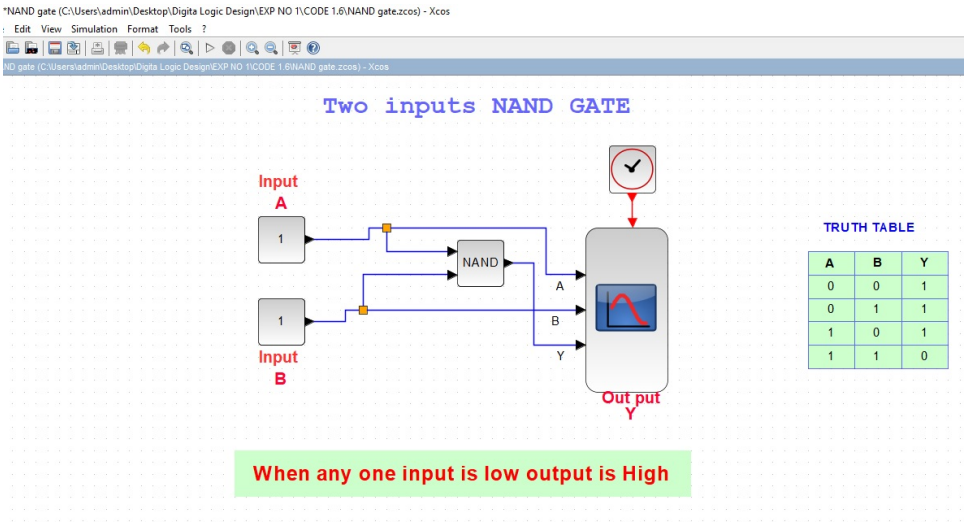

Figure 1.11: NAND GATE

This code can be downloaded from the website wwww.scilab.in

This code can be downloaded from the website wwww.scilab.in



Figure 1.12: NAND GATE

Experiment: 2

Design and simulate AND, OR, NOT, EXOR gates using Universal gates: NAND and NOR.

This code can be downloaded from the website wwww.scilab.in

This code can be downloaded from the website wwww.scilab.in

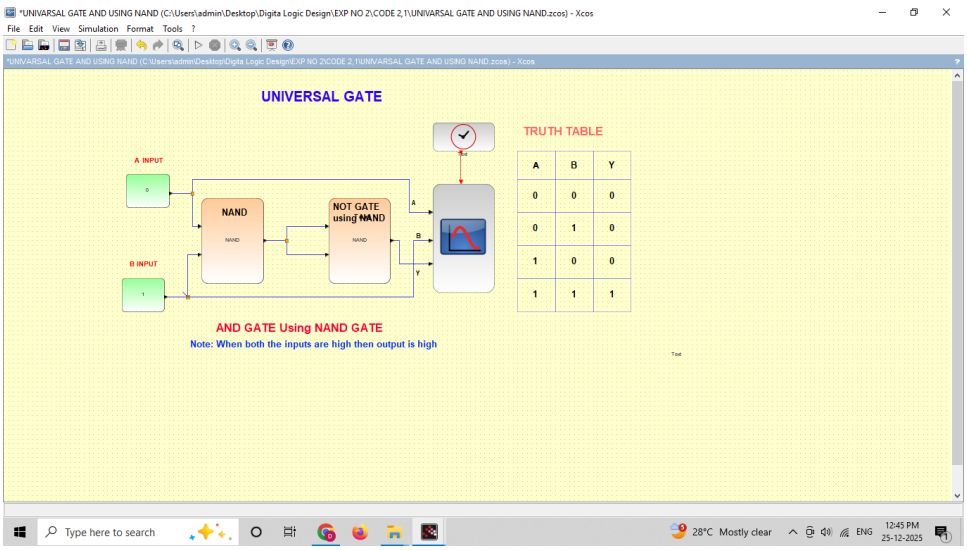

Figure 2.1: AND GATE USING NAND



Figure 2.2: AND GATE USING NAND

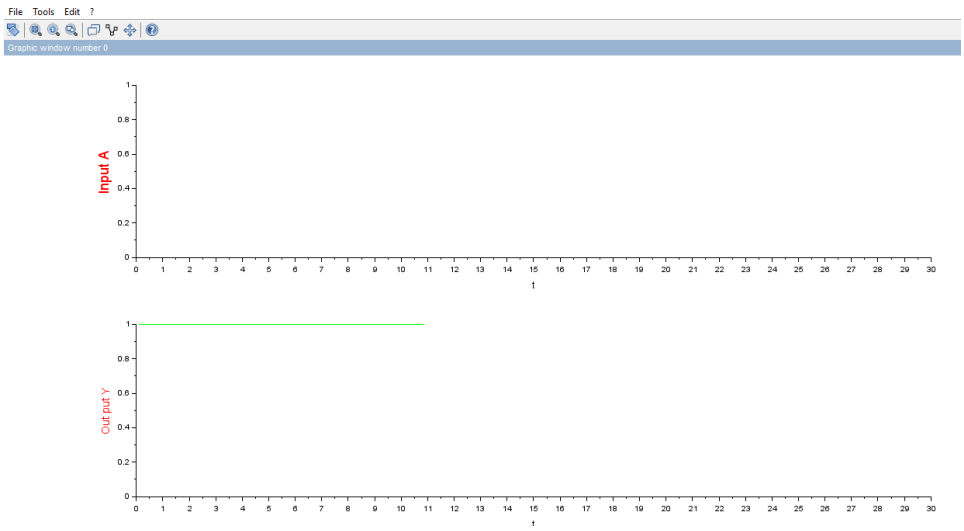

Figure 2.3: NOT GATE USING NAND GATE

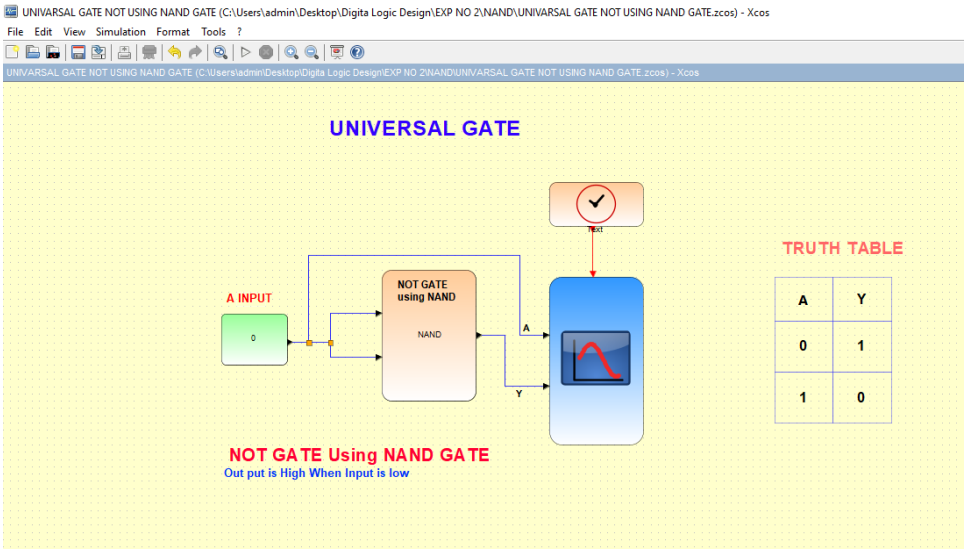

Figure 2.4: NOT GATE USING NAND GATE

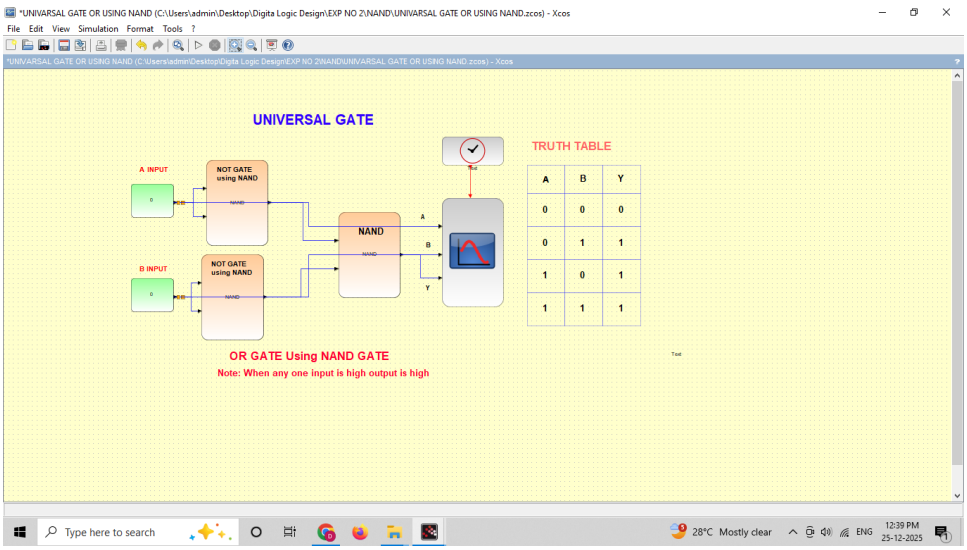

Figure 2.5: OR GATE USING NAND GATE



Figure 2.6: OR GATE USING NAND GATE

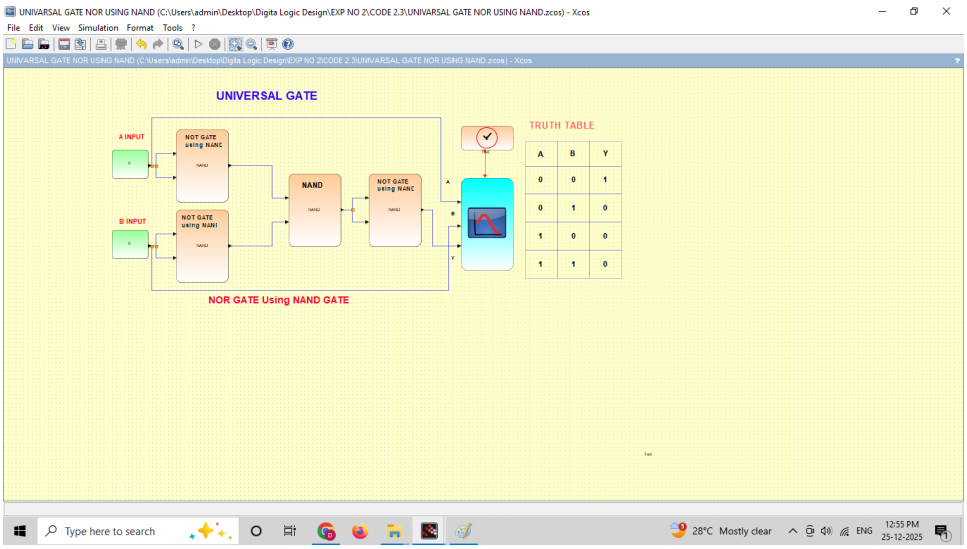

Figure 2.7: NOR GATE USING NAND GATE

This code can be downloaded from the website wwww.scilab.in

This code can be downloaded from the website wwww.scilab.in

This code can be downloaded from the website wwww.scilab.in

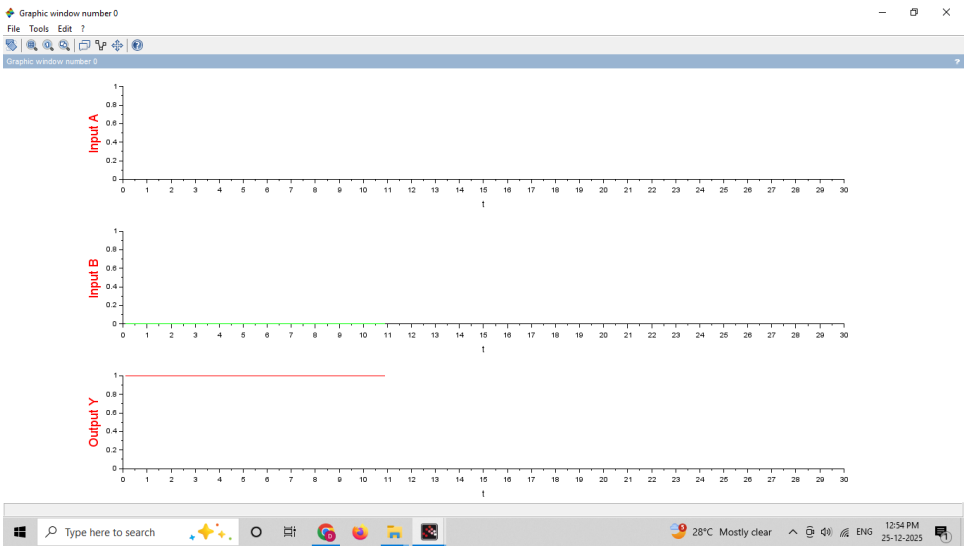

Figure 2.8: NOR GATE USING NAND GATE



Figure 2.9: XOR GATE USING NAND GATE

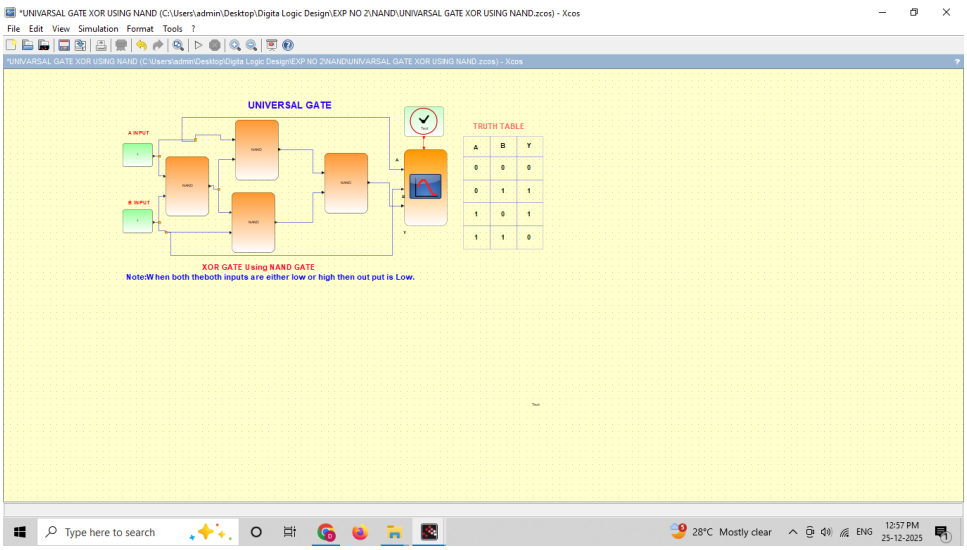

Figure 2.10: XOR GATE USING NAND GATE

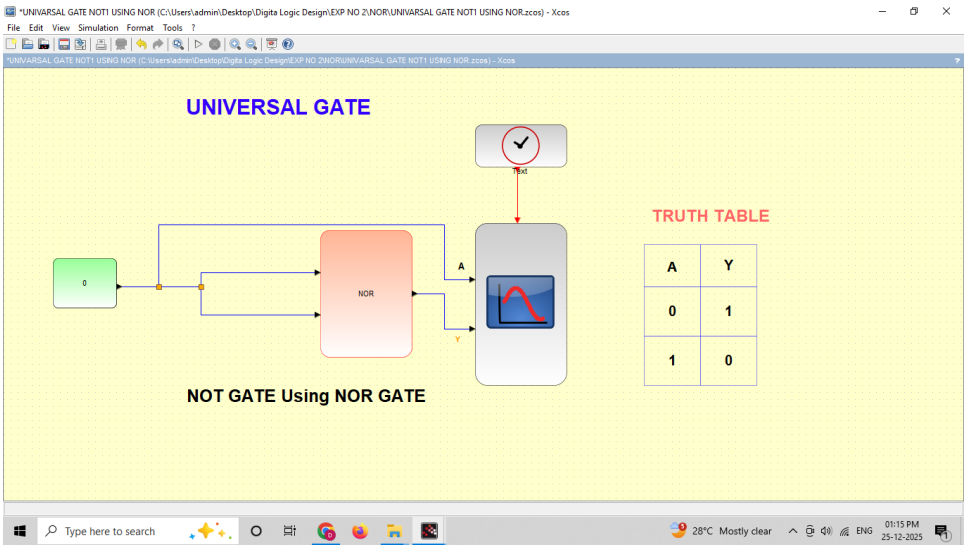

Figure 2.11: NOT GATE USING NAND GATE



Figure 2.12: NOT GATE USING NAND GATE

This code can be downloaded from the website wwww.scilab.in

This code can be downloaded from the website wwww.scilab.in

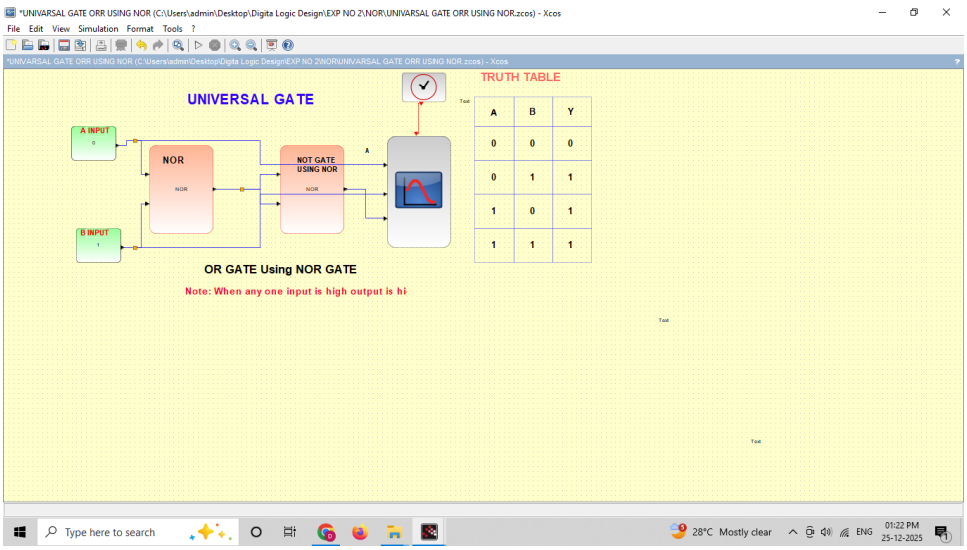

Figure 2.13: OR GATE USING NOR GATE



Figure 2.14: OR GATE USING NOR GATE



Figure 2.15: AND GATE USING NORGATE

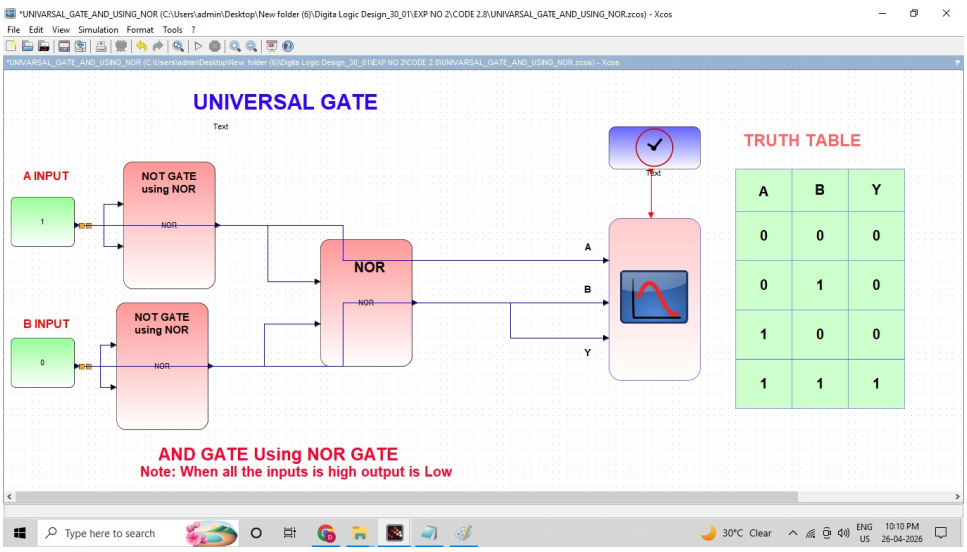

Figure 2.16: AND GATE USING NORGATE

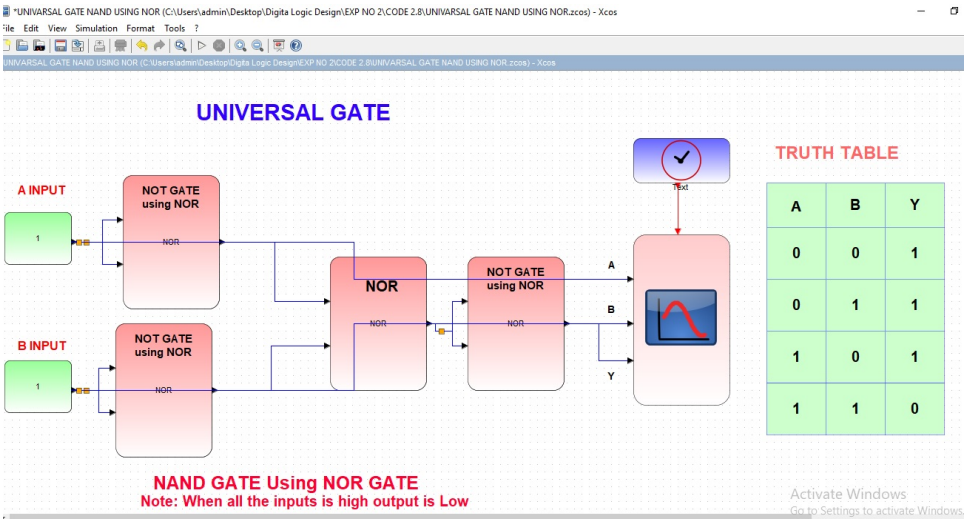

Figure 2.17: NAND GATE USING NOR GATE

This code can be downloaded from the website wwww.scilab.in

This code can be downloaded from the website wwww.scilab.in

This code can be downloaded from the website wwww.scilab.in

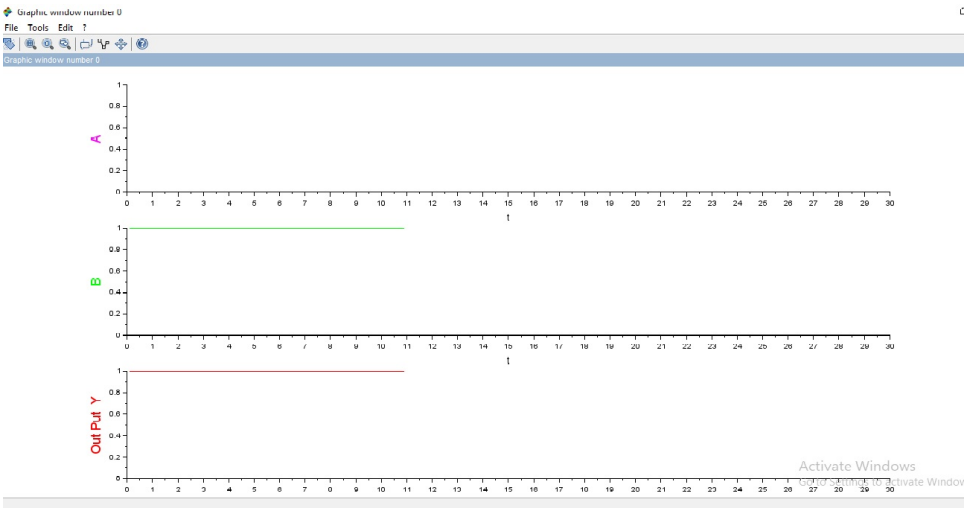

Figure 2.18: NAND GATE USING NOR GATE

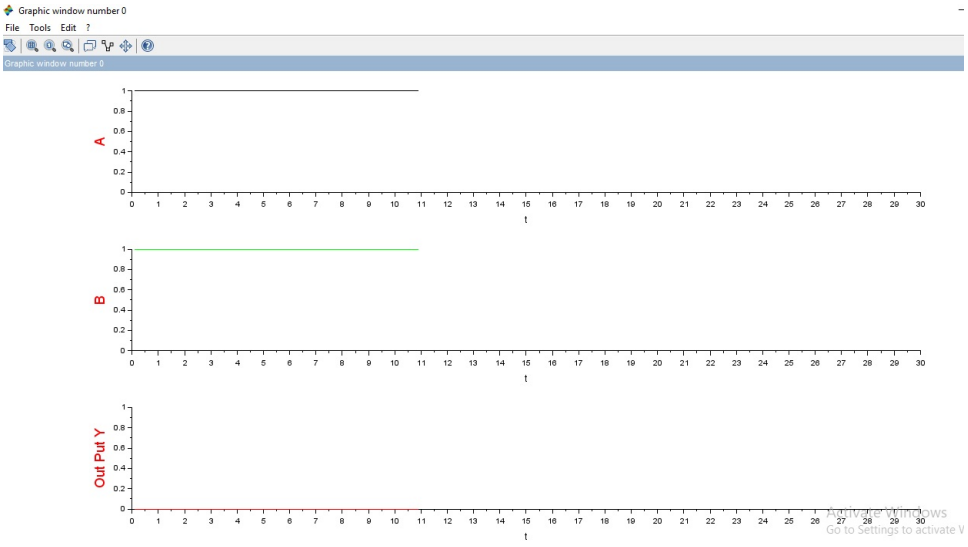

Figure 2.19: XOR GATE USING NOR GATE

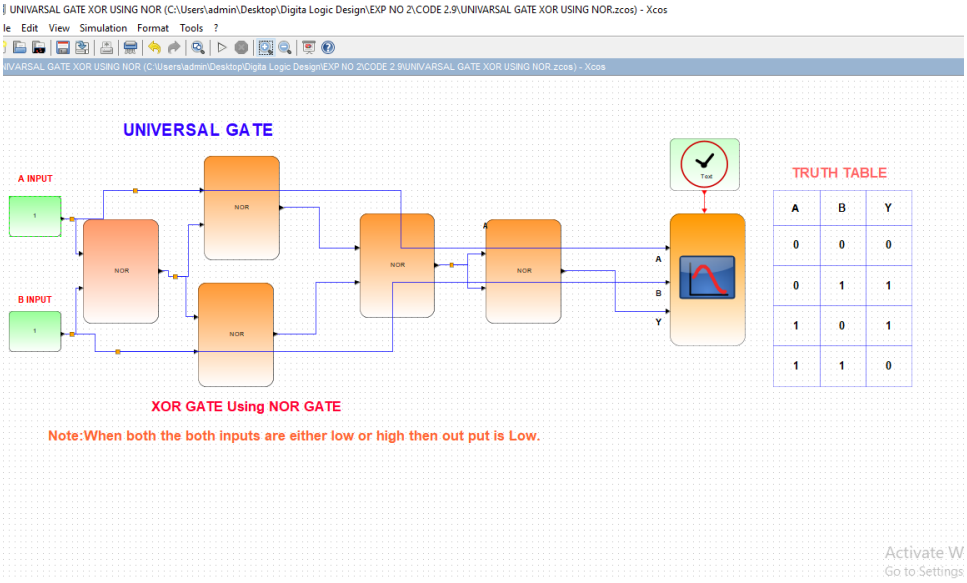

Figure 2.20: XOR GATE USING NOR GATE

Experiment: 3

Design and simulate digital circuits to perform Binary to Gray and Gray to Binary operations.

This code can be downloaded from the website wwww.scilab.in

This code can be downloaded from the website wwww.scilab.in

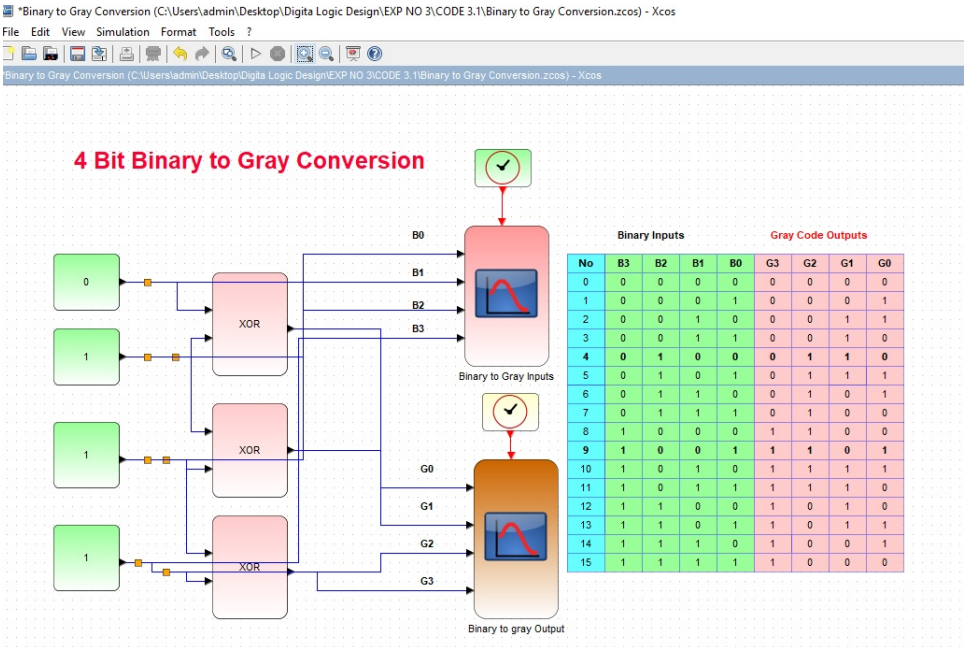

Figure 3.1: Binary to Gray code Converter

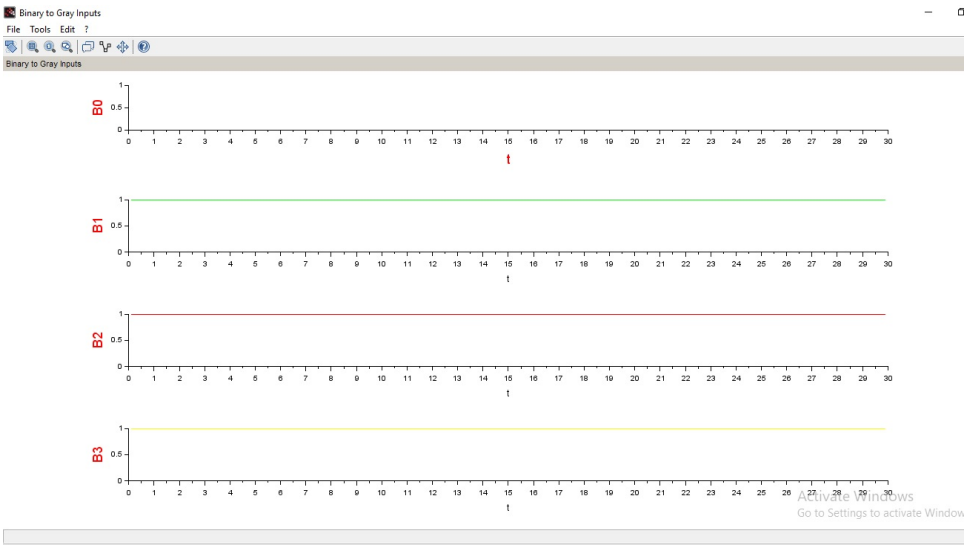

Figure 3.2: Binary to Gray code Converter

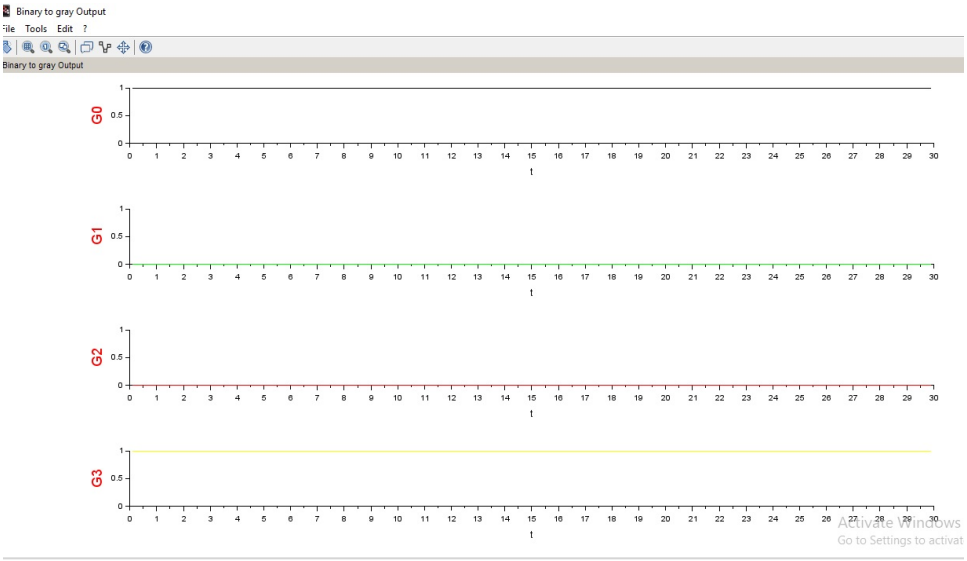

Figure 3.3: Binary to Gray code Converter

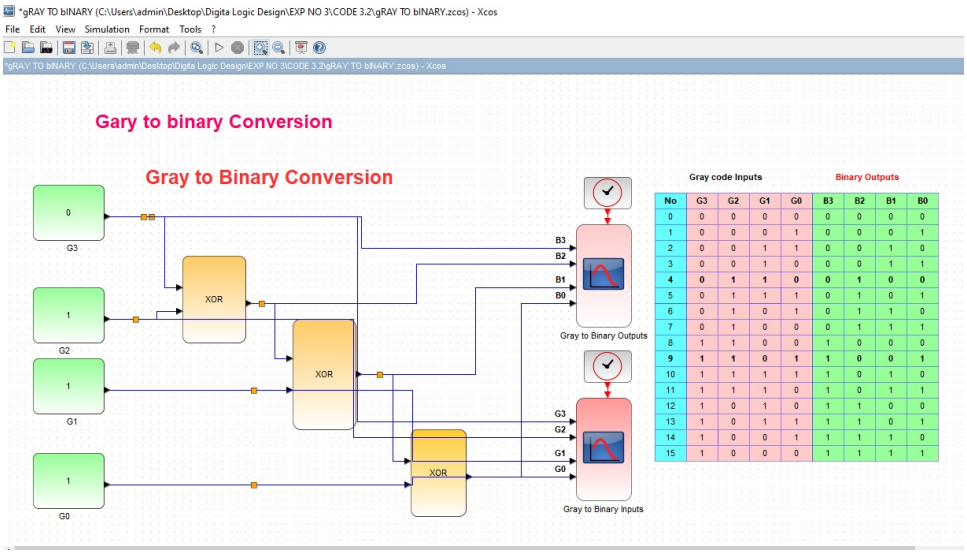

Figure 3.4: gray to binary code conversion

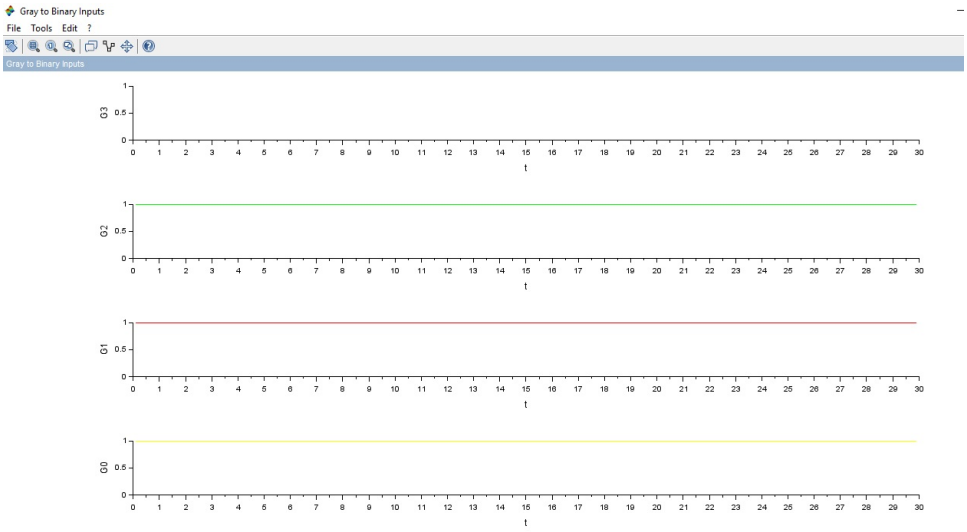

Figure 3.5: gray to binary code conversion

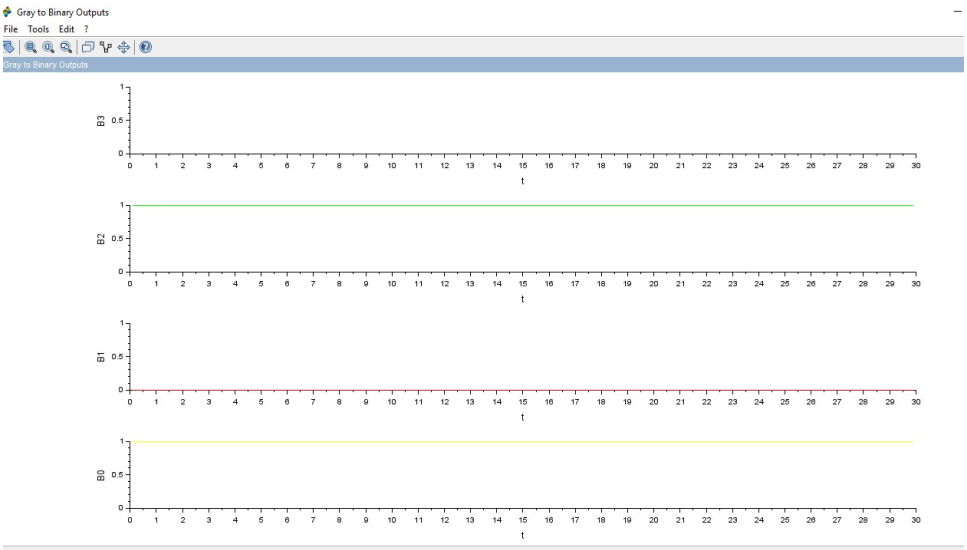

Figure 3.6: gray to binary code conversion

Experiment: 4

Design and simulate Magnitude Comparator.

This code can be downloaded from the website wwww.scilab.in

This code can be downloaded from the website wwww.scilab.in

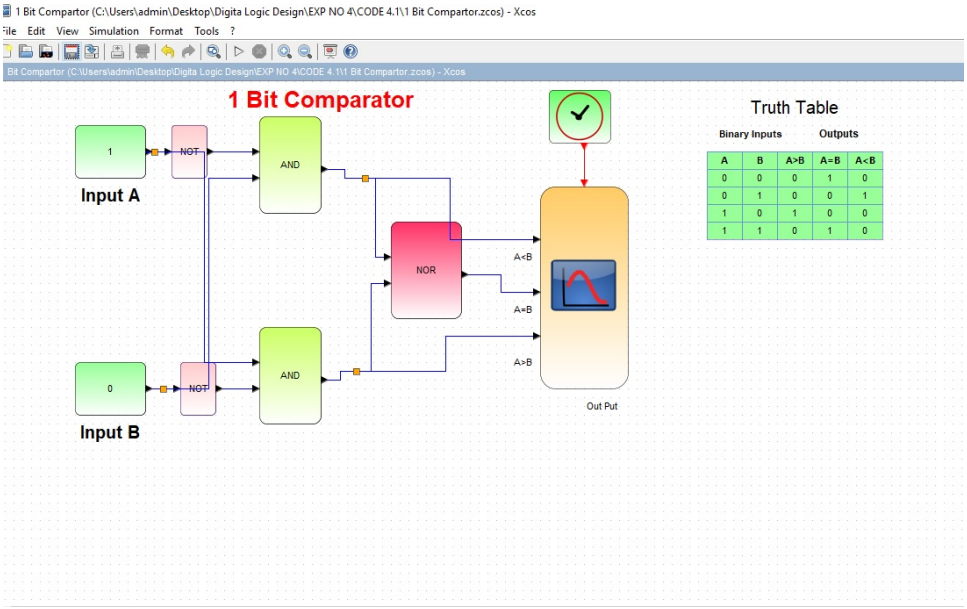

Figure 4.1: One bit Comparator

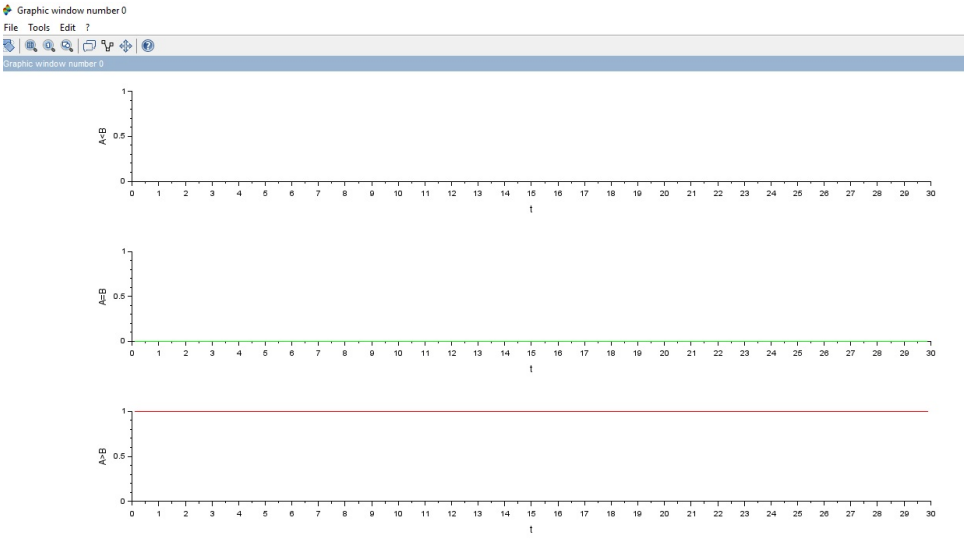

Figure 4.2: One bit Comparator

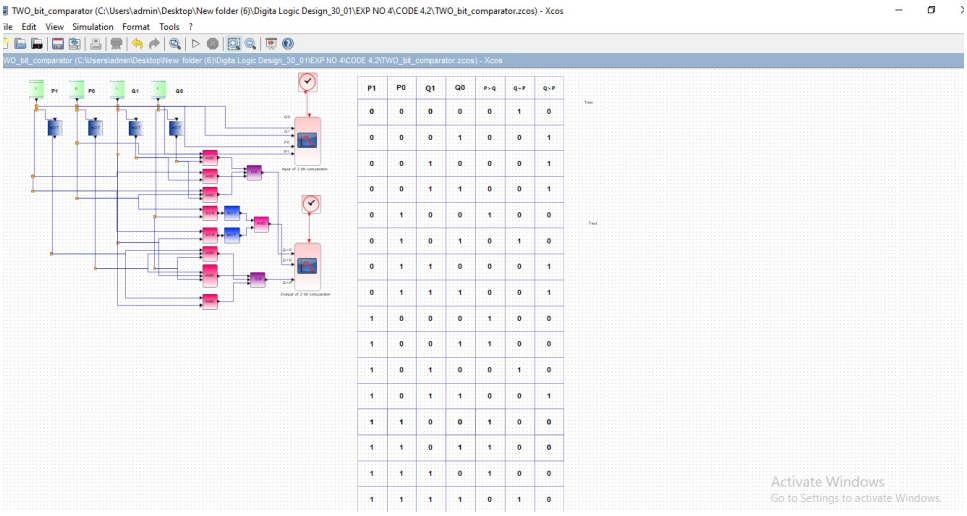

Figure 4.3: two bit comparator

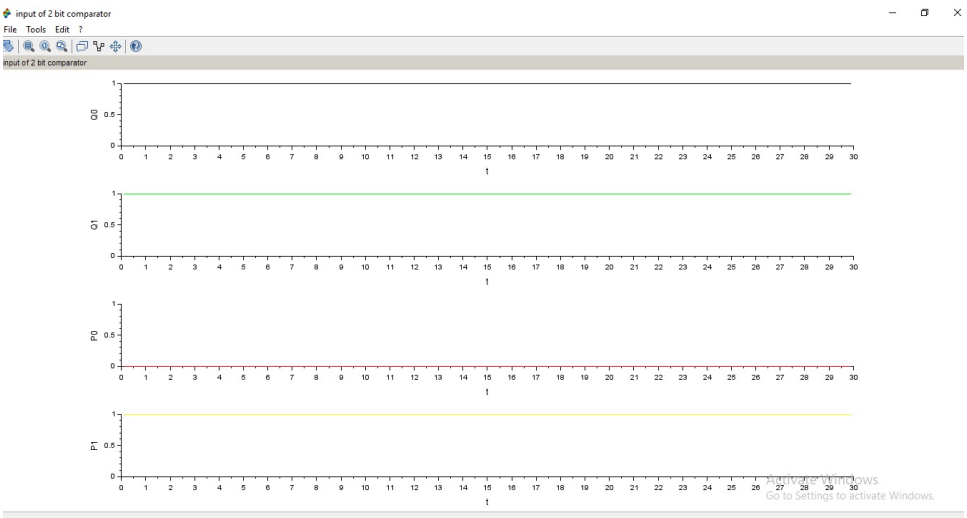

Figure 4.4: two bit comparator

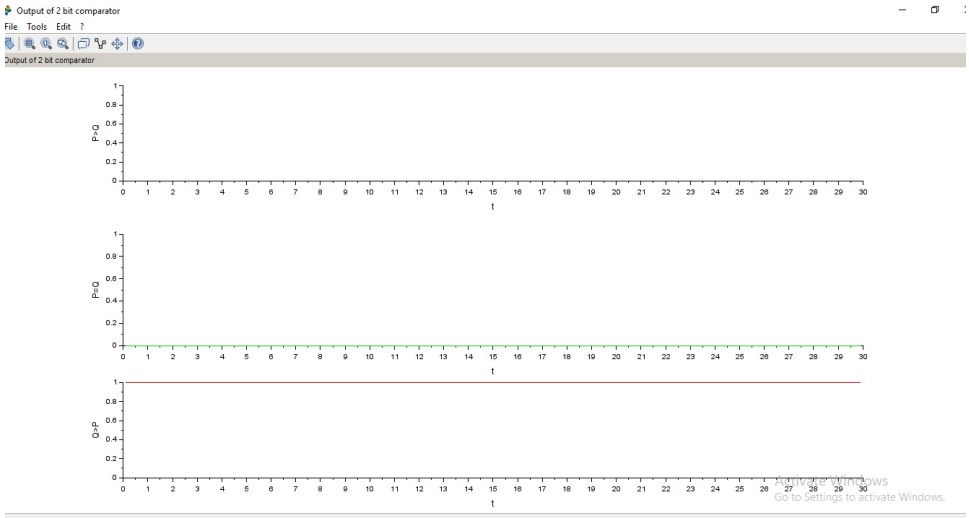

Figure 4.5: two bit comparator

Experiment: 5

Design and simulate parity generator and detector.

This code can be downloaded from the website wwww.scilab.in

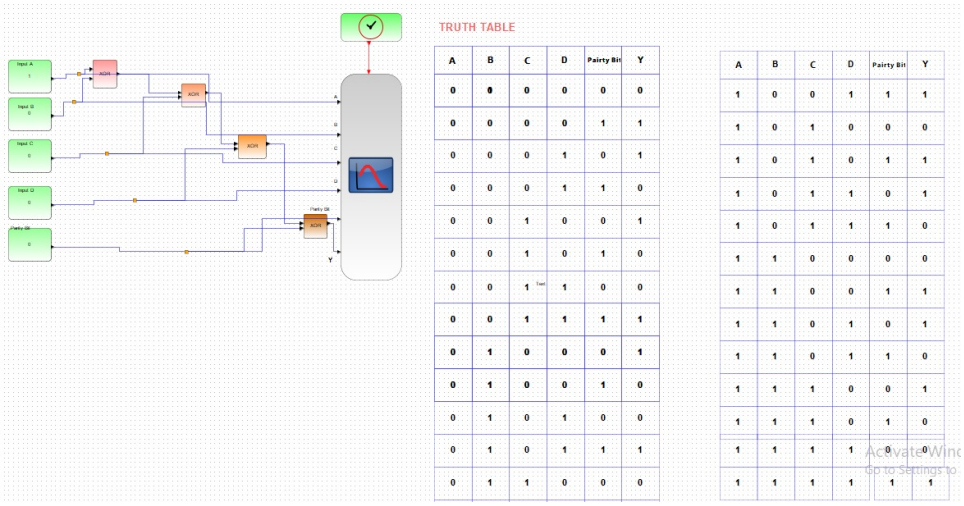

TRUTH TABLE

A	B	C	D	Pairty Bit	Y
0	0	0	0	0	0
0	0	0	0	1	1
0	0	0	1	0	1
0	0	0	1	1	0
0	0	1	0	0	1
0	0	1	0	1	0
0	0	1	1	0	0
0	0	1	1	1	1
0	1	0	0	0	1
0	1	0	0	1	0
0	1	0	1	0	0
0	1	0	1	1	1
0	1	1	0	0	0

A	B	C	D	Pairty Bit	Y
1	0	0	1	1	1
1	0	1	0	0	0
1	0	1	0	1	1
1	0	1	1	0	1
1	0	1	1	1	0
1	1	0	0	0	0
1	1	0	0	1	1
1	1	0	1	0	1
1	1	0	1	1	0
1	1	1	0	0	1
1	1	1	0	1	0
1	1	1	1	0	0
1	1	1	1	1	1

Figure 5.1: Parity Generator

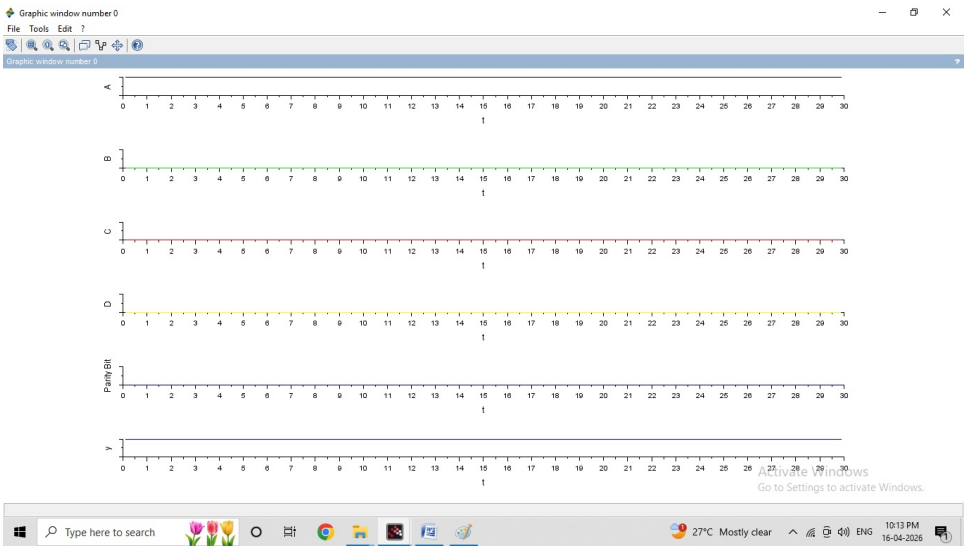

Figure 5.2: Parity Generator

Experiment: 6

Design and simulate Half adder, Full adder Circuits

This code can be downloaded from the website wwww.scilab.in

This code can be downloaded from the website wwww.scilab.in

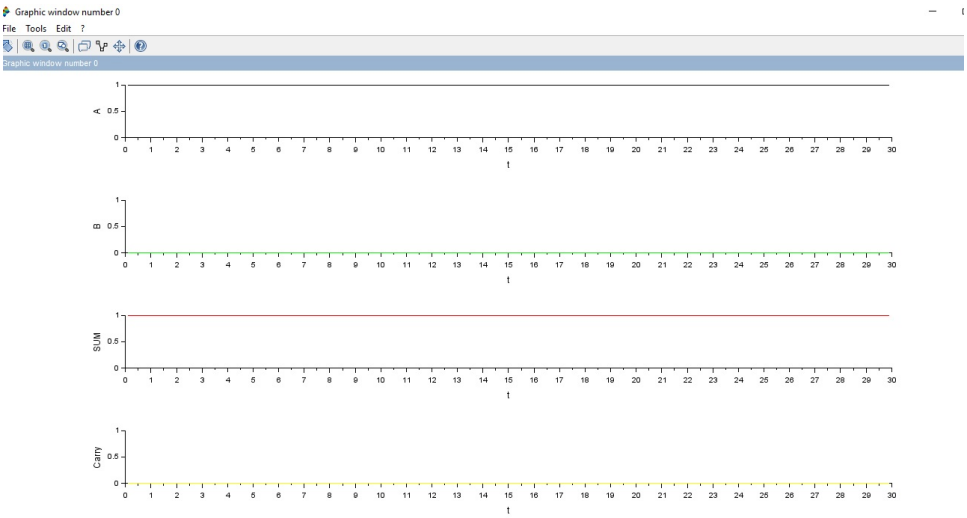

Figure 6.1: Half Adder

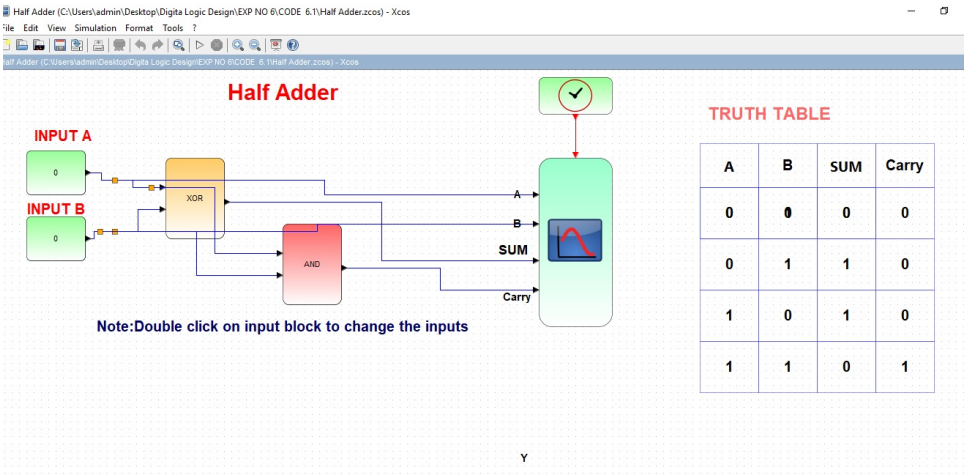

Figure 6.2: Half Adder

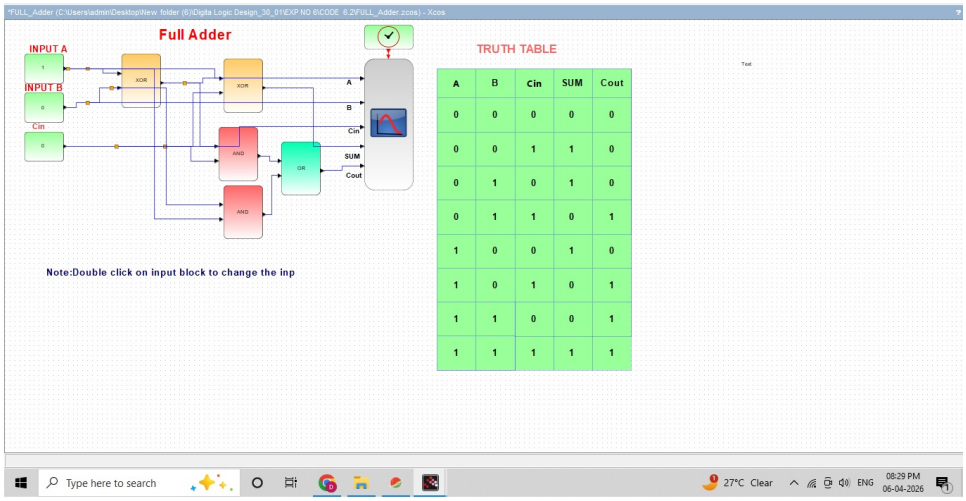

Figure 6.3: Full Adder

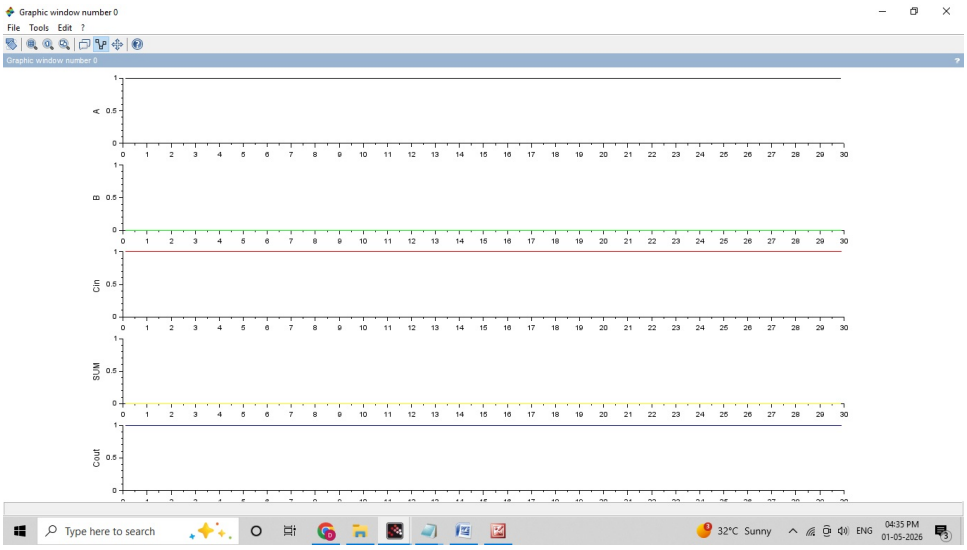

Figure 6.4: Full Adder

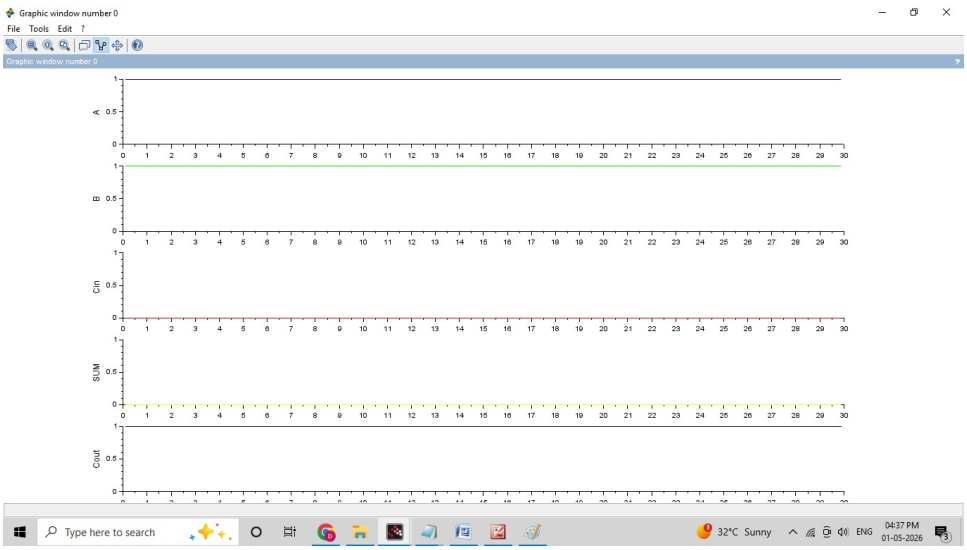

Figure 6.5: Full Adder

Experiment: 7

Design and simulate Half subtractor and Full subtractor circuits.

This code can be downloaded from the website wwww.scilab.in

This code can be downloaded from the website wwww.scilab.in

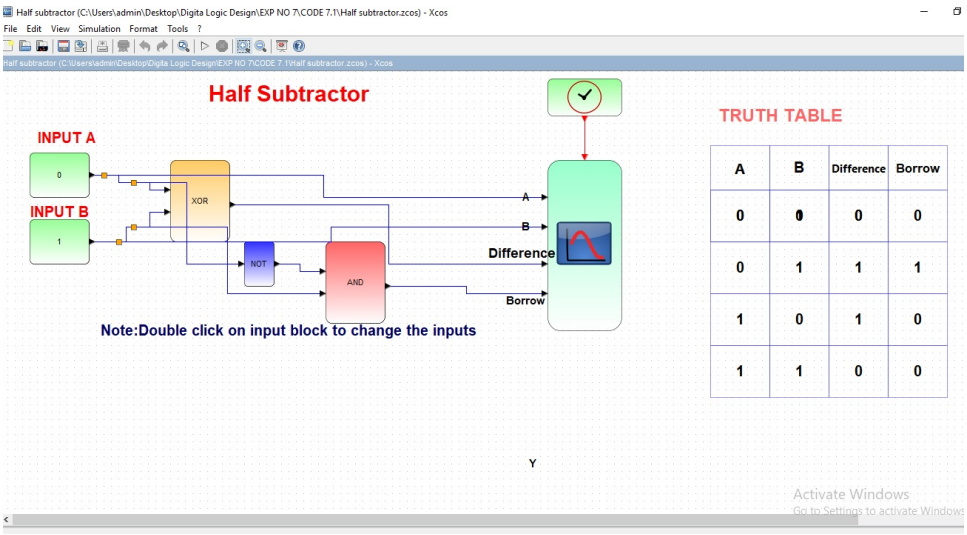

Figure 7.1: Half Subtractor

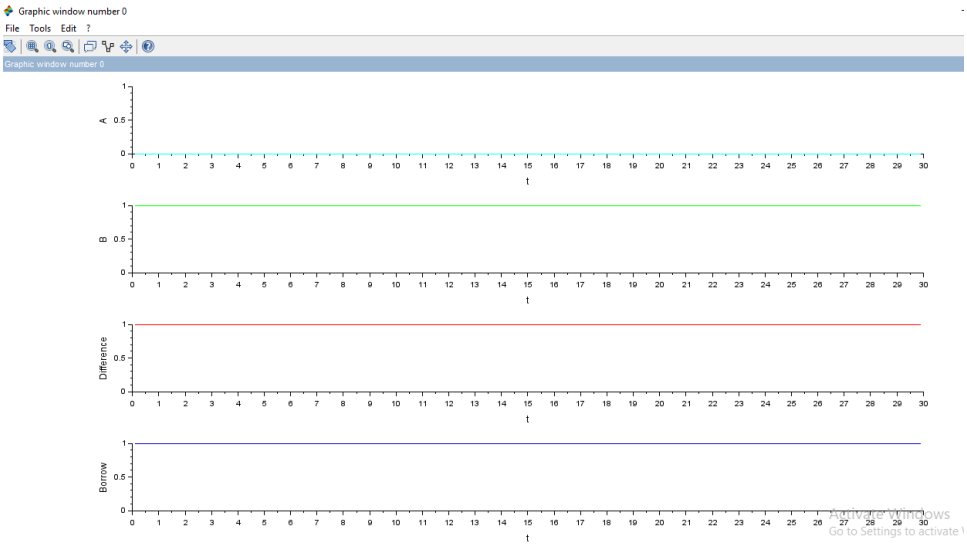

Figure 7.2: Half Subtractor

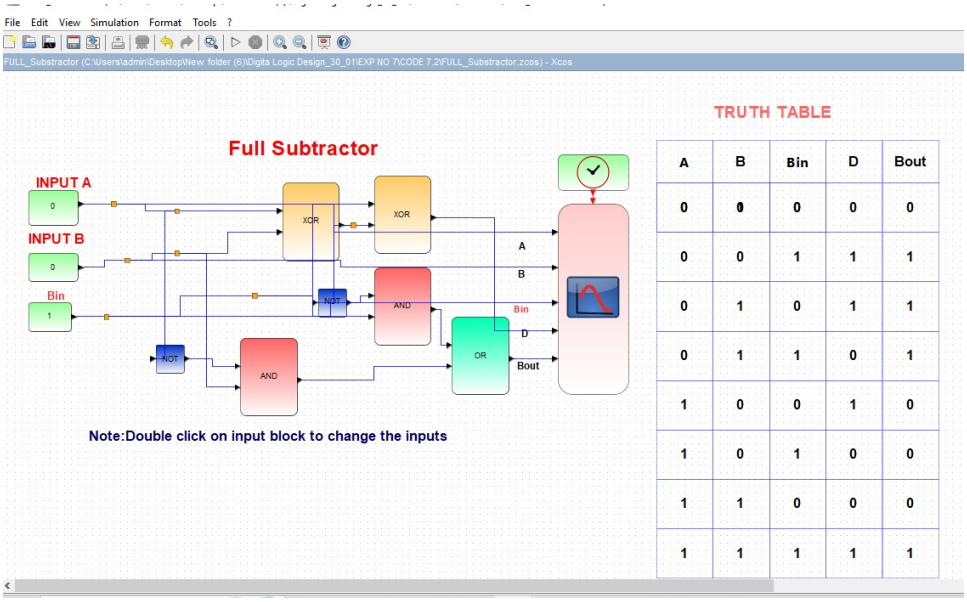

Figure 7.3: Full Subtractor

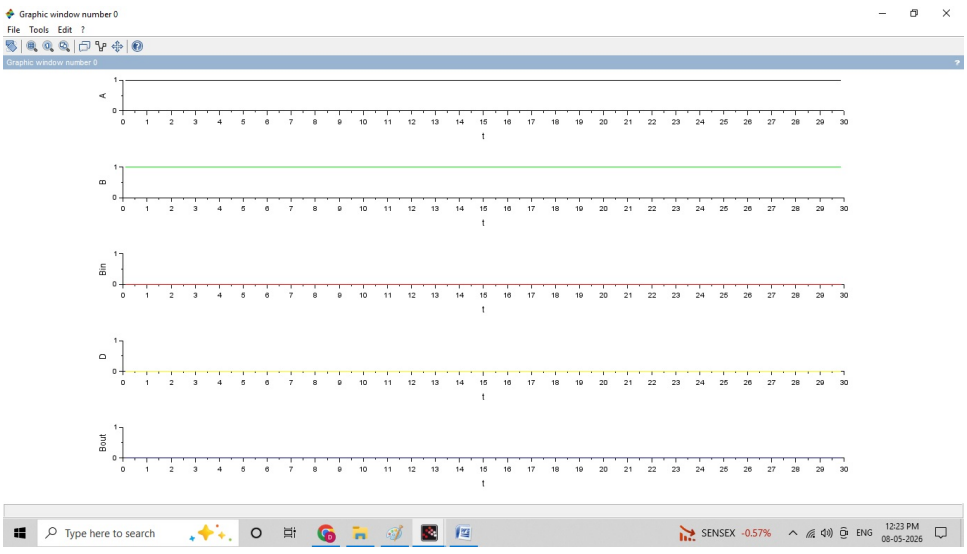

Figure 7.4: Full Subtractor

Experiment: 8

Design and simulate encoder and decoder circuits.

This code can be downloaded from the website wwww.scilab.in This code

can be downloaded from the website wwww.scilab.in

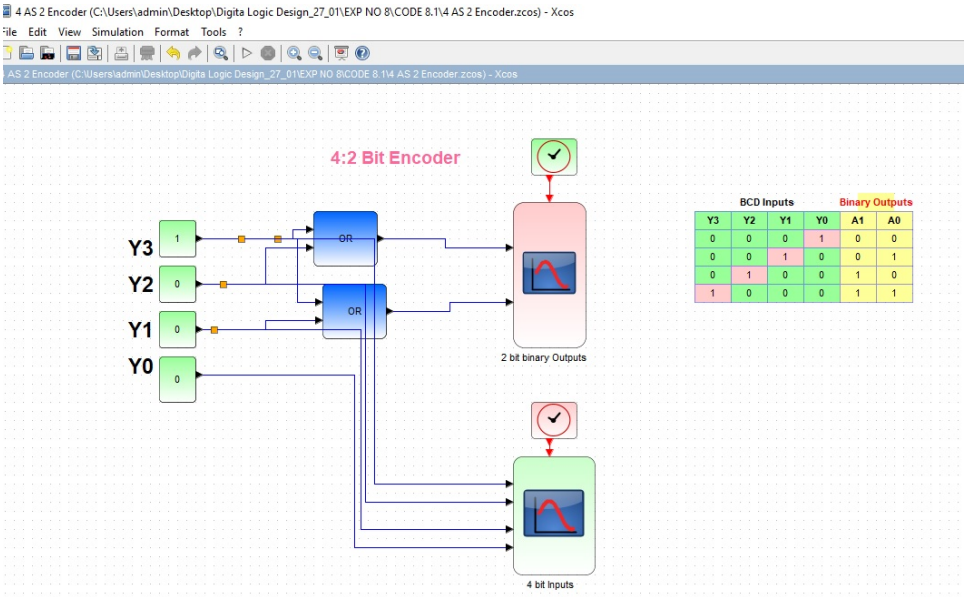

Figure 8.1: Four as Two bit encoder

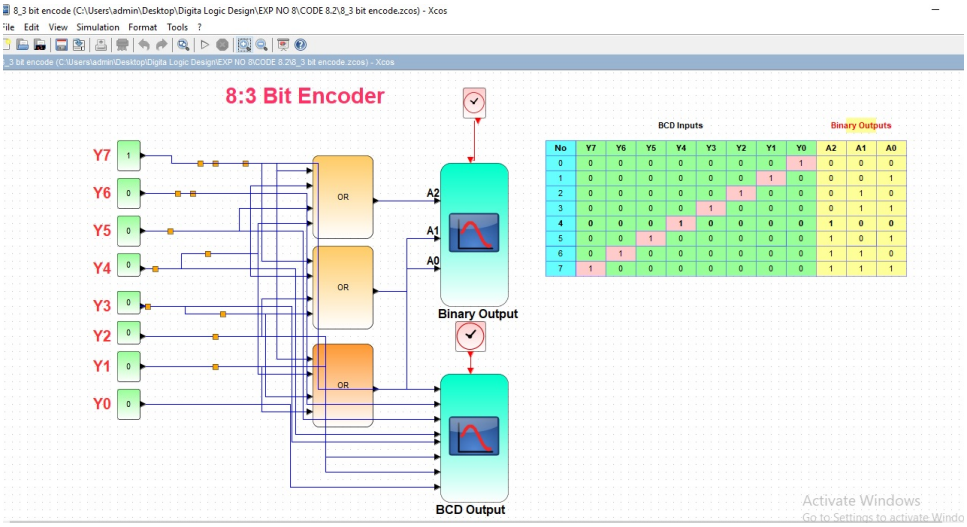

Figure 8.2: Eight AS TO THREE BIT ENCODER

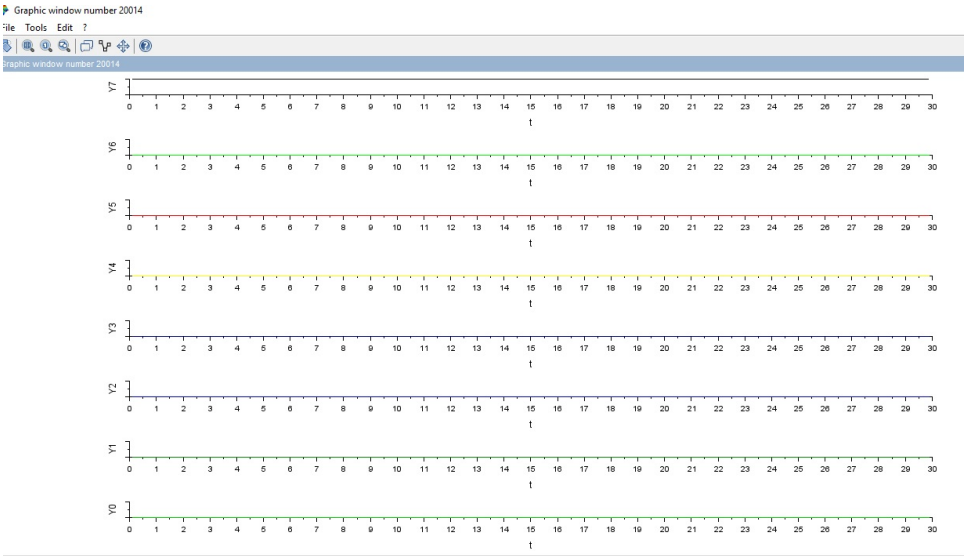

Figure 8.3: Eight AS TO THREE BIT ENCODER

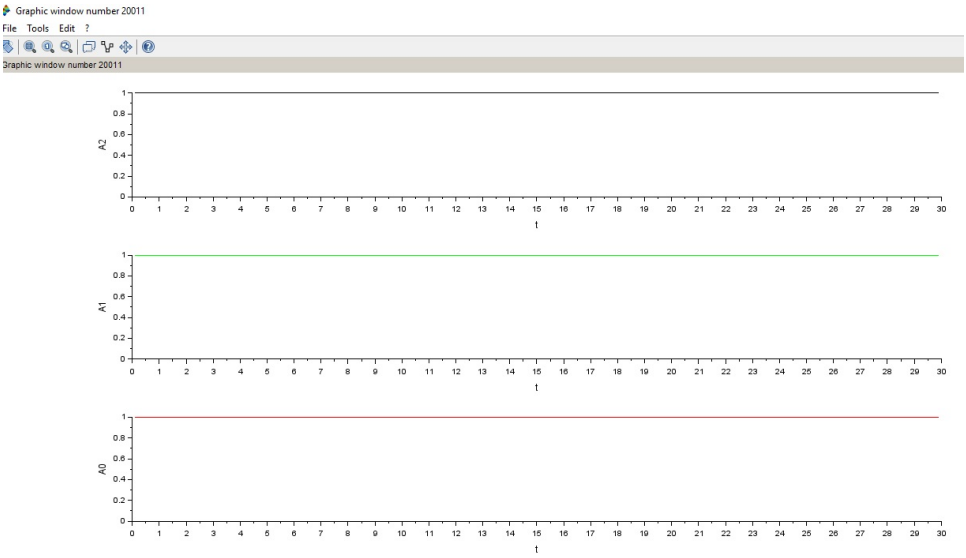

Figure 8.4: Eight AS TO THREE BIT ENCODER

Experiment: 9

Design and simulate decoder circuits.

This code can be downloaded from the website wwww.scilab.in

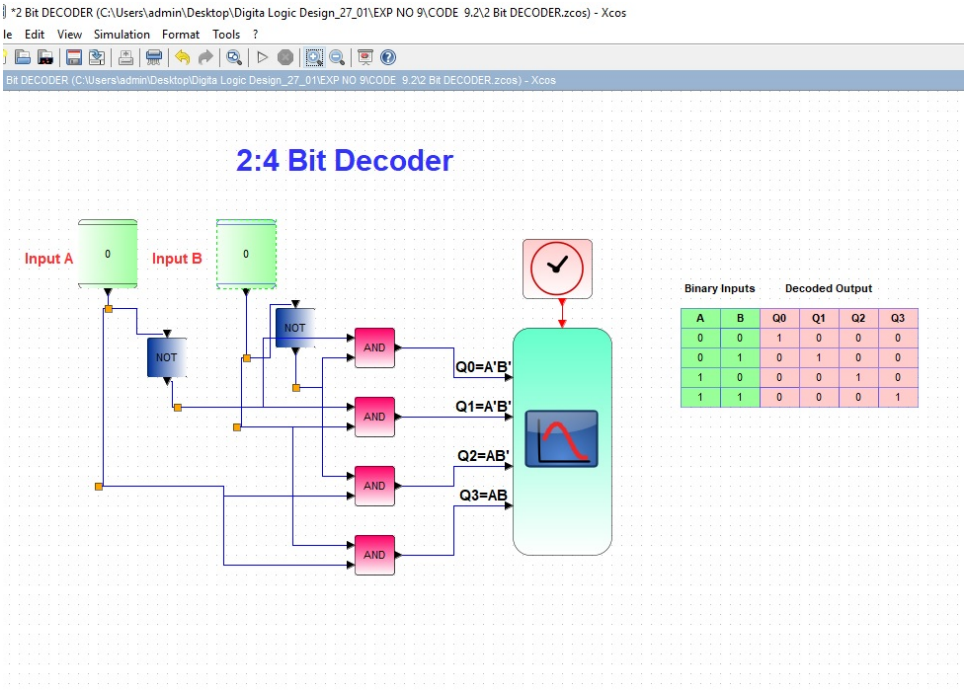

Figure 9.1: TWO BIT DECODER

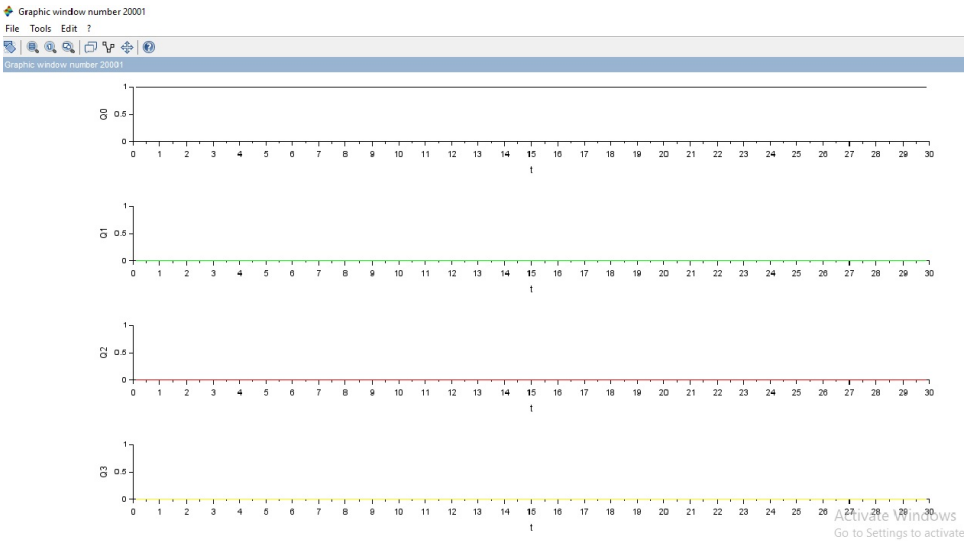

Figure 9.2: TWO BIT DECODER

Experiment: 10

Design and simulate 2:1,4:1 Multiplexer.

This code can be downloaded from the website wwww.scilab.in

This code can be downloaded from the website wwww.scilab.in

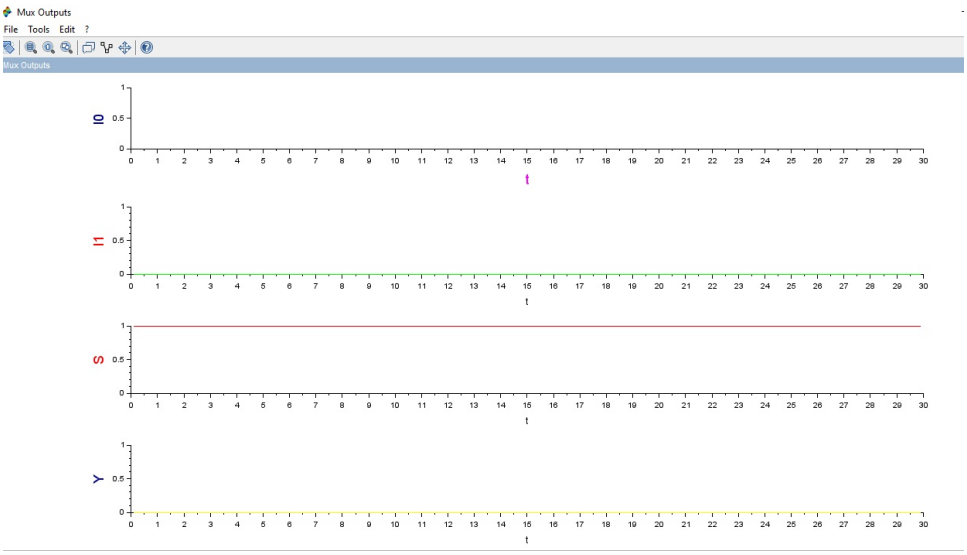

Figure 10.1: TWO AS TO ONE MULTIPLEXER

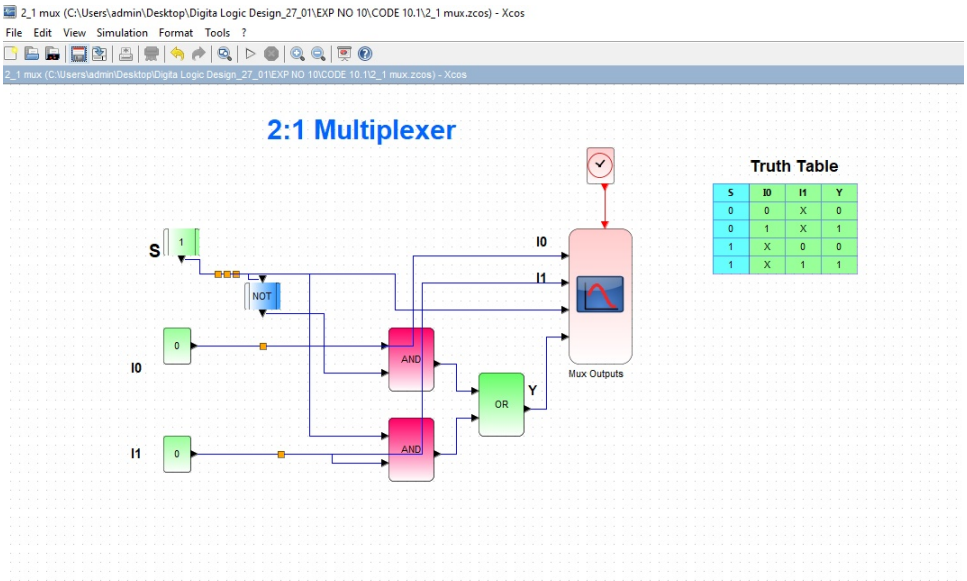

Figure 10.2: TWO AS TO ONE MULTIPLEXER

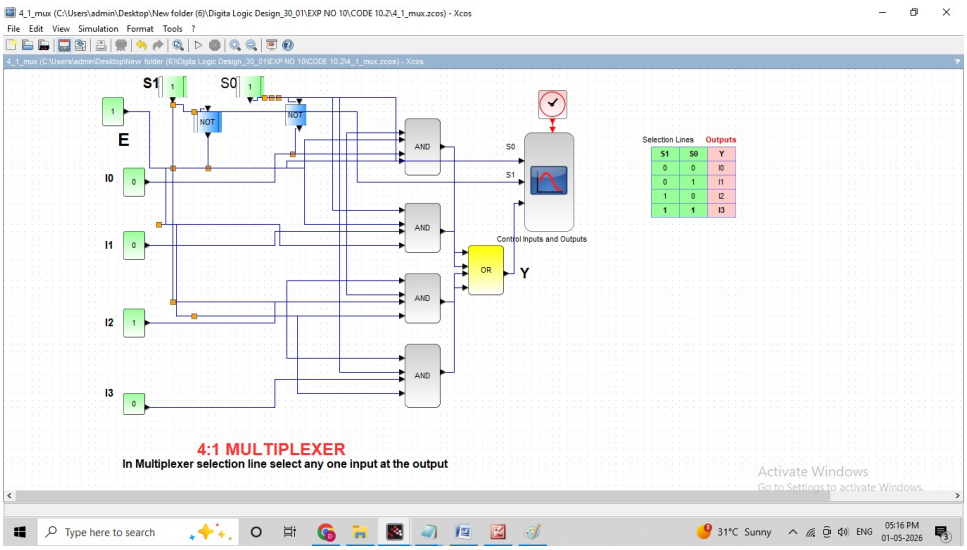

Figure 10.3: Four as to one Multiplexer



Figure 10.4: Four as to one Multiplexer



Figure 10.5: Four as to one Multiplexer

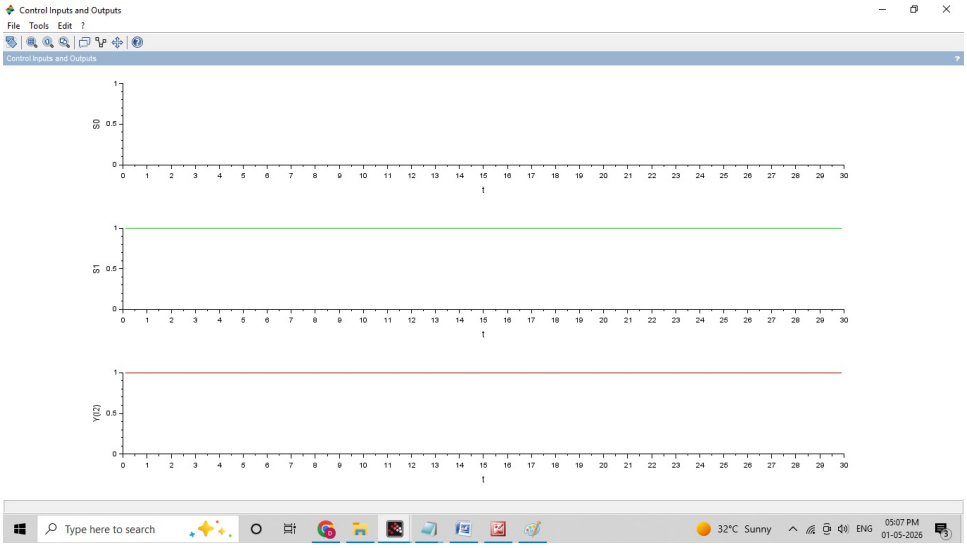

Figure 10.6: Four as to one Multiplexer

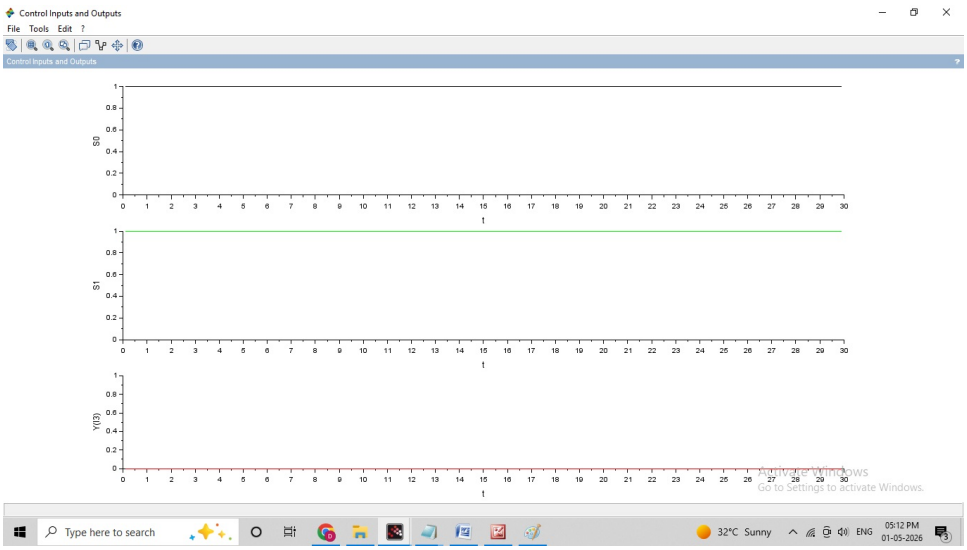

Figure 10.7: Four as to one Multiplexer

Experiment: 11

Design and simulate 1:2. 1:4De Multiplexer.

This code can be downloaded from the website wwww.scilab.in

This code can be downloaded from the website wwww.scilab.in

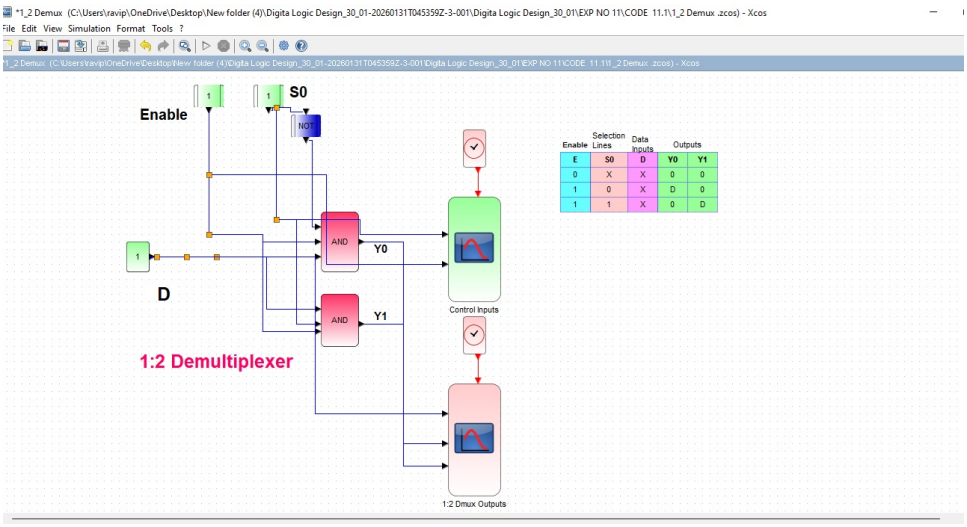

Figure 11.1: One as to Two DeMultiplexer



Figure 11.2: One as to Two DeMultiplexer

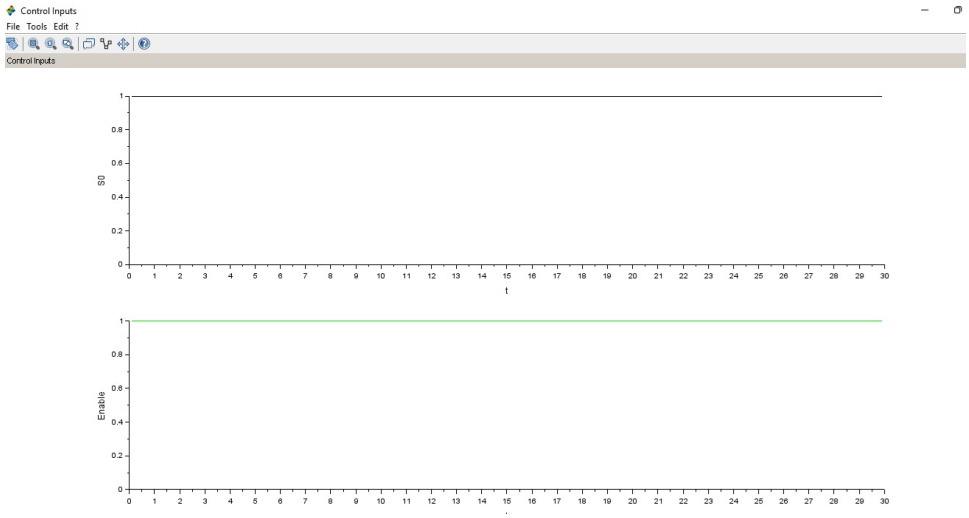

Figure 11.3: One as to Two DeMultiplexer

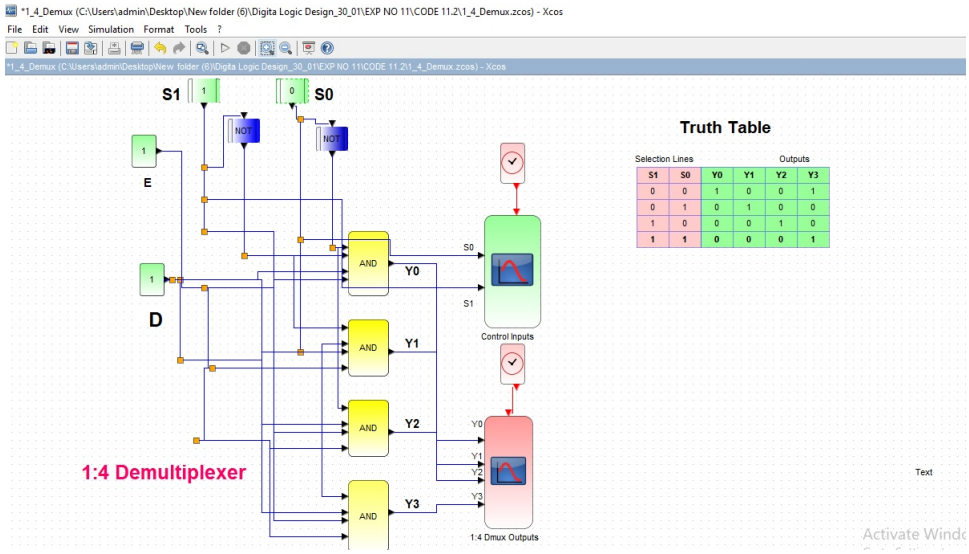

Figure 11.4: one as to Four Demux

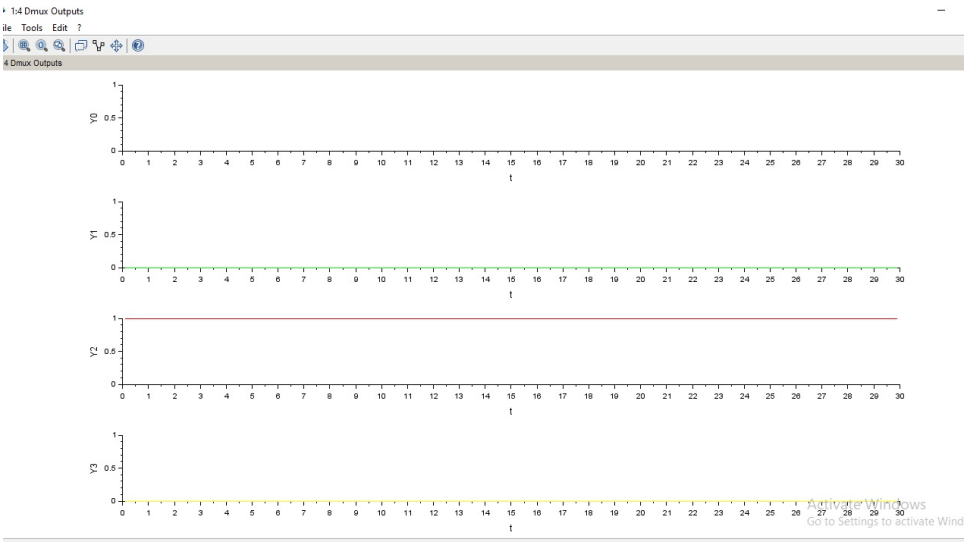

Figure 11.5: one as to Four Demux

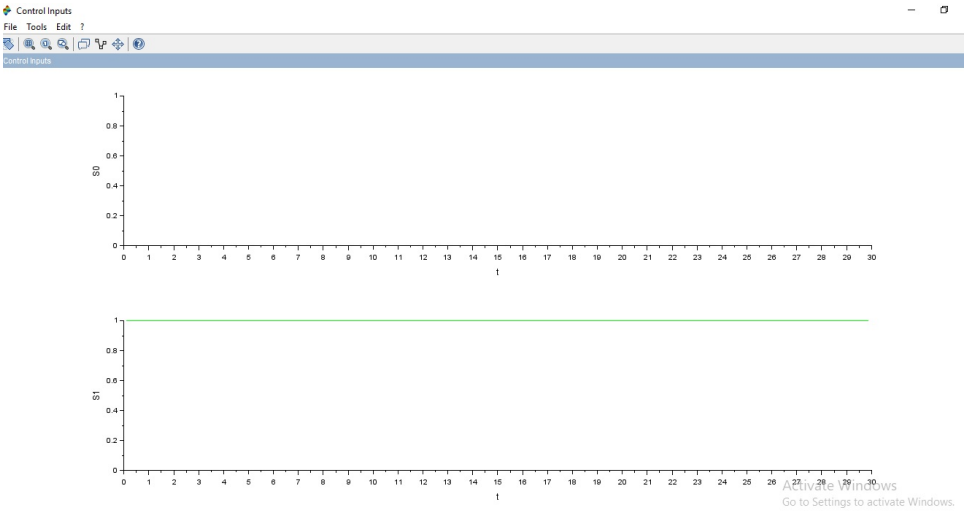

Figure 11.6: one as to Four Demux

Experiment: 12

Design and simulate SR and D types of flip flops.

This code can be downloaded from the website wwww.scilab.in

This code can be downloaded from the website wwww.scilab.in

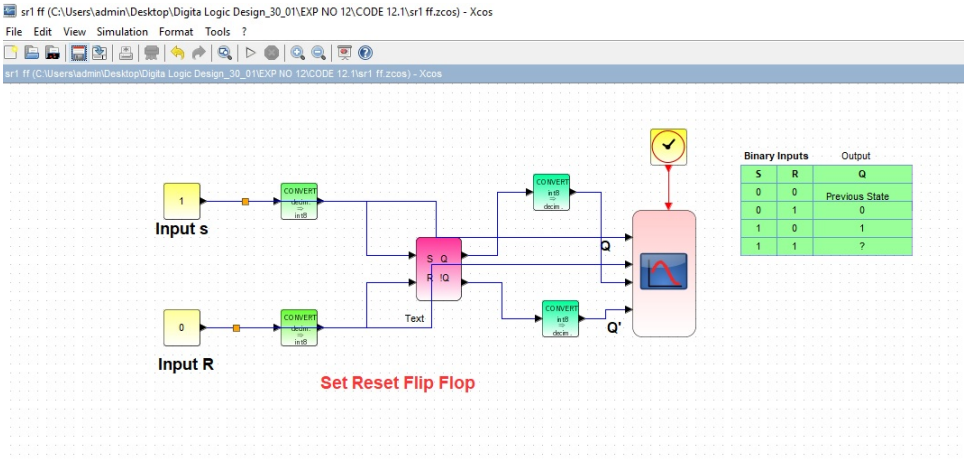

Figure 12.1: SR FF



Figure 12.2: SR FF

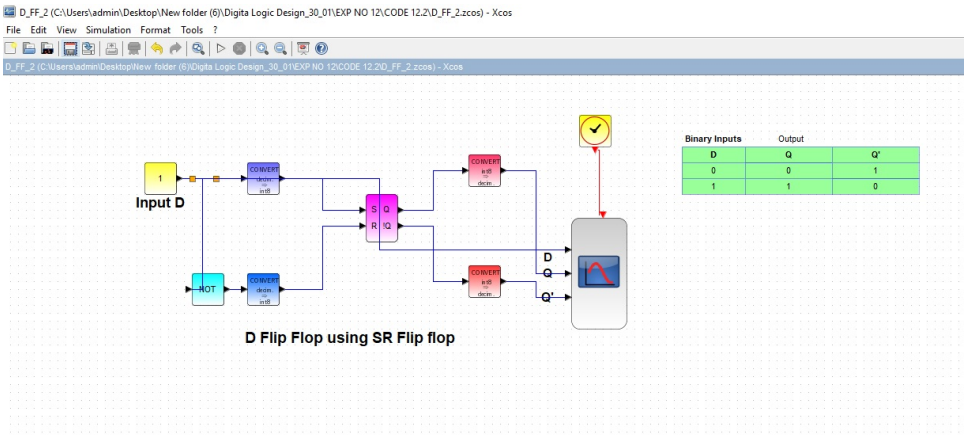

Figure 12.3: D FF

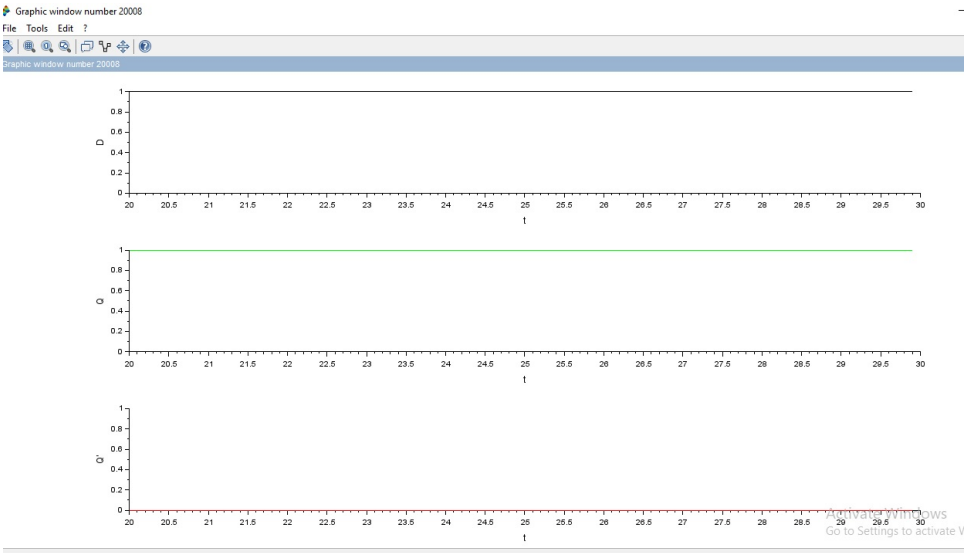

Figure 12.4: D FF