Scilab Manual for Simulation lab / Pulse & Digital Circuits lab / SEEK Course (Skill for Employability Enhancement of Knowledge) / DLDMP lab

by Dr Jitesh Ramdas Shinde
Others
Vaagdevi College Of Engineering[1]

Solutions provided by
Dr Jitesh Ramdas Shinde
Others
Vaagdevi College Of Engineering

November 24, 2026

[1]Funded by a grant from the National Mission on Education through ICT, http://spoken-tutorial.org/NMEICT-Intro. This Scilab Manual and Scilab codes written in it can be downloaded from the "Migrated Labs" section at the website http://scilab.in

Contents

List of Scilab Solutions 4

1 Digital Logic Gates Design & Implementation in Xcos 7

2 Half Adder and Full Adder Design & Implementation in Xcos 11

3 Half Subtractor and Full Subtractor Design & Implementation in Xcos 14

4 4 bit Ripple Carry Adder Design & Implementation in Xcos 17

5 BCD Adder Design & Implementation in Xcos 20

6 Multiplexer Design and implementation & its application in Xcos 22

7 Demultiplexer Design and implementation & its application in Xcos 25

8 Decoder Design and implementation & its application in Xcos 28

9 Flip flop Design & Implementation in Xcos 31

10 Asynchronous Counter Design & Implementation in Xcos 34

11 Synchronous Counter Design & Implementation in Xcos 36

12 Code Converter Design (eg.binary to gray code conversion) & Implementation in Xcos **39**

List of Experiments

List of Figures

1.1 XOR gate design using basic logic gates 8
1.2 XOR gate design using basic logic gates 8
1.3 XOR gate design using NAND gate 9
1.4 XOR gate design using NAND gate 9
1.5 XOR gate design using NOR gate 10
1.6 XOR gate design using NOR gate 10

2.1 Half Adder design 12
2.2 Half Adder design 12
2.3 Full Adder Design 13
2.4 Full Adder Design 13

3.1 Half Subtractor design 15
3.2 Half Subtractor design 15
3.3 Full Subtractor Design 16
3.4 Full Subtractor Design 16

4.1 Ripple Carry Adder Design 18
4.2 Ripple Carry Adder Design 19
4.3 Ripple Carry Adder Design 19

5.1 BCD Adder Design 21
5.2 BCD Adder Design 21

6.1 Multiplexer 4 to 1 design 23
6.2 Multiplexer 4 to 1 design 23
6.3 Multiplexer Application Half Adder design 24
6.4 Multiplexer Application Half Adder design 24

7.1 Demultiplxer 1 to 4 26

7.2 Demultiplxer 1 to 4 26
7.3 Demultiplxer Application Half Adder design 27
7.4 Demultiplxer Application Half Adder design 27

8.1 Decoder 2 to 4 design 29
8.2 Decoder 2 to 4 design 29
8.3 Decoder Application Half Subtractor design 30
8.4 Decoder Application Half Subtractor design 30

9.1 JK flip flop 32
9.2 JK flip flop 32
9.3 D flip flop 33
9.4 D flip flop 33

10.1 Asynchronous 3 bit up counter design 35
10.2 Asynchronous 3 bit up counter design 35

11.1 Three bit up synchronous counter 37
11.2 Three bit up synchronous counter 37
11.3 Three bit down synchronous counter 38
11.4 Three bit down synchronous counter 38

12.1 Binary to Gray code converter 40
12.2 Binary to Gray code converter 41
12.3 Binary to Gray code converter 42
12.4 Binary to Gray code converter 42

Experiment: 1

Digital Logic Gates Design & Implementation in Xcos

This code can be downloaded from the website wwww.scilab.in

This code can be downloaded from the website wwww.scilab.in

This code can be downloaded from the website wwww.scilab.in

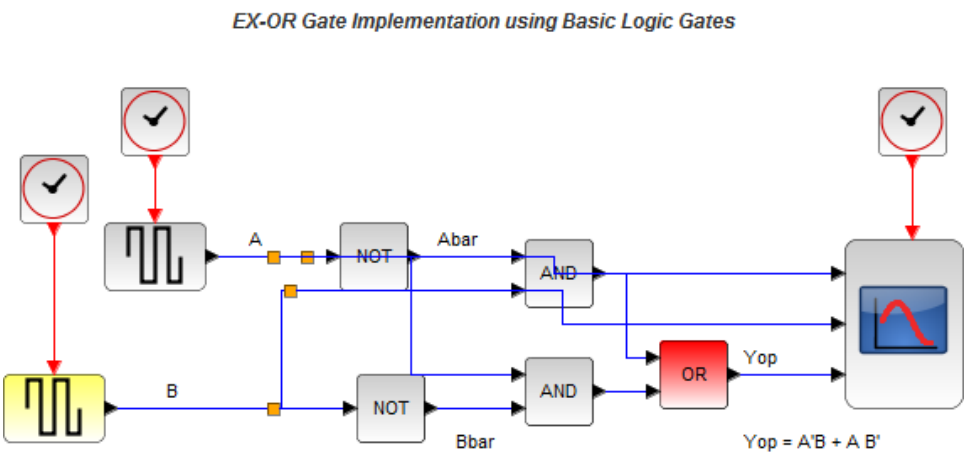

Figure 1.1: XOR gate design using basic logic gates

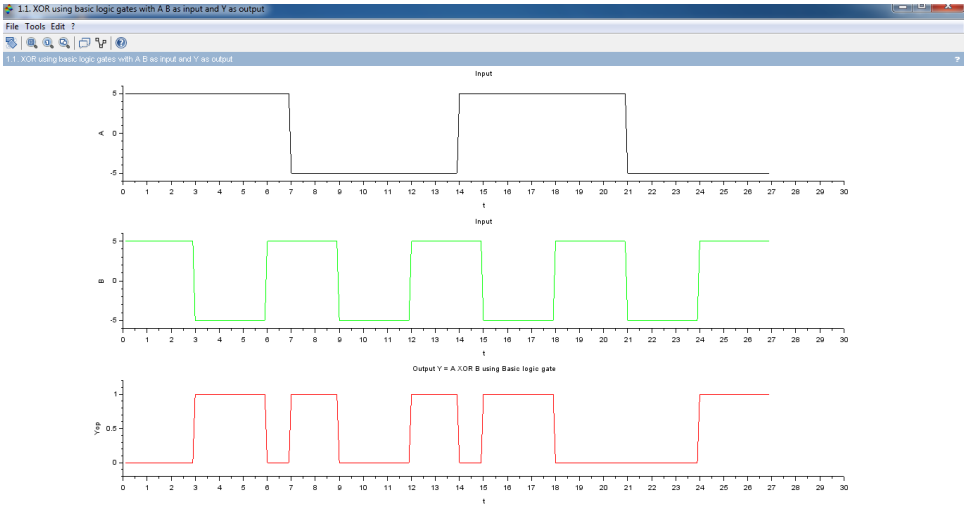

Figure 1.2: XOR gate design using basic logic gates

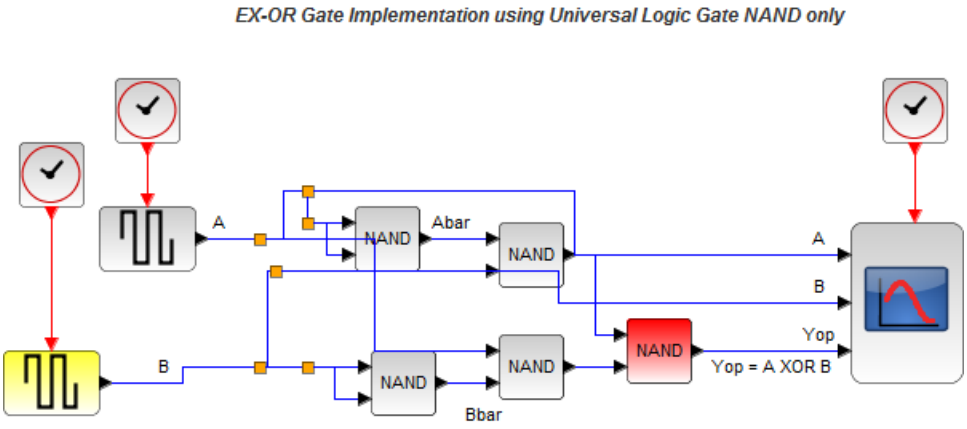

Figure 1.3: XOR gate design using NAND gate

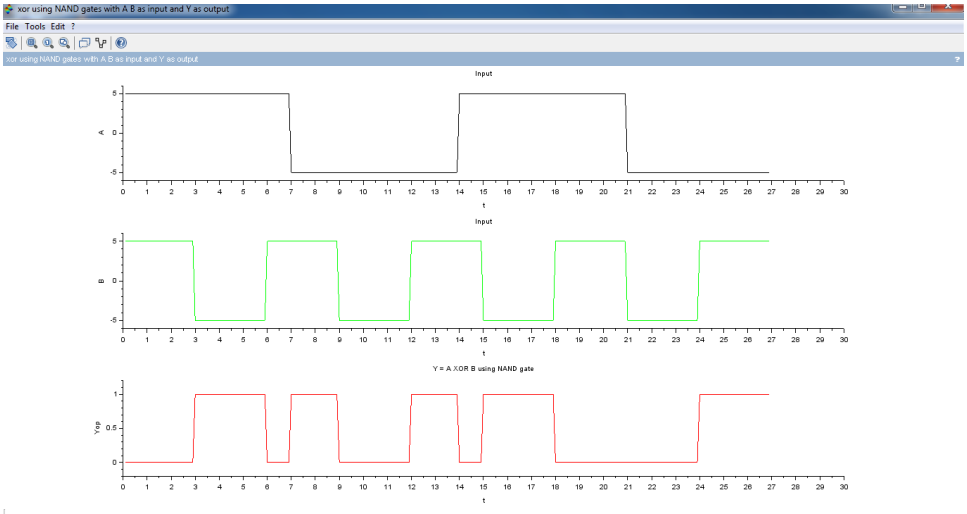

Figure 1.4: XOR gate design using NAND gate

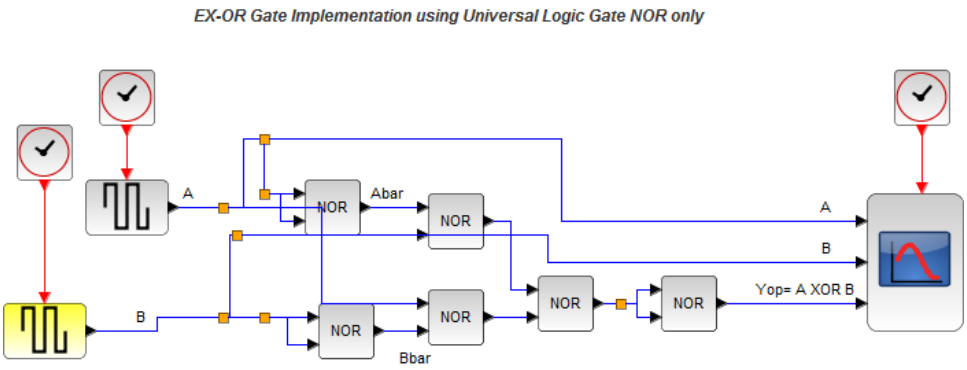

Figure 1.5: XOR gate design using NOR gate

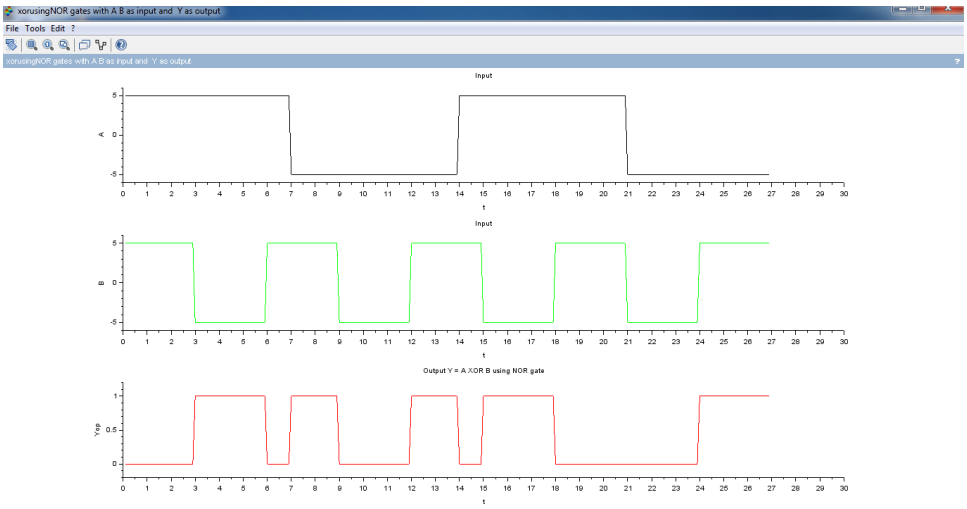

Figure 1.6: XOR gate design using NOR gate

Experiment: 2

Half Adder and Full Adder Design & Implementation in Xcos

This code can be downloaded from the website wwww.scilab.in

This code can be downloaded from the website wwww.scilab.in

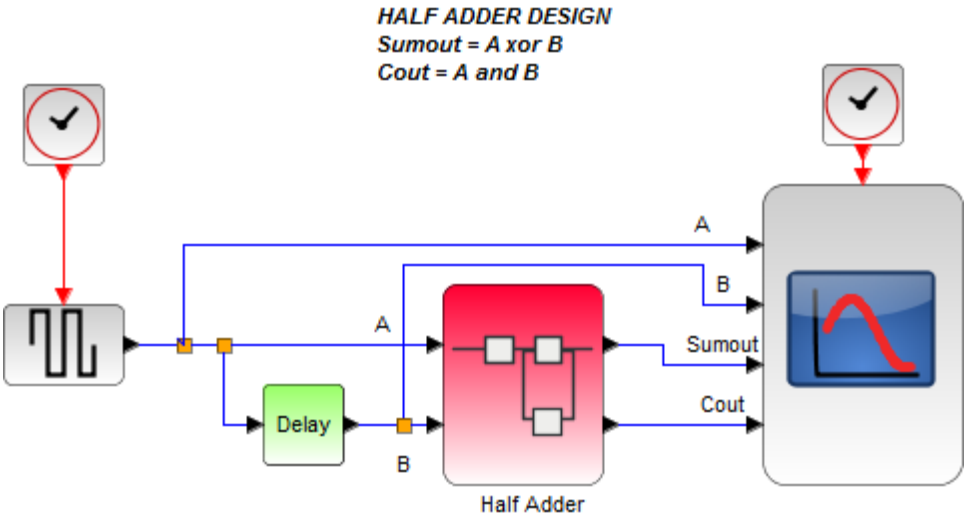

Figure 2.1: Half Adder design

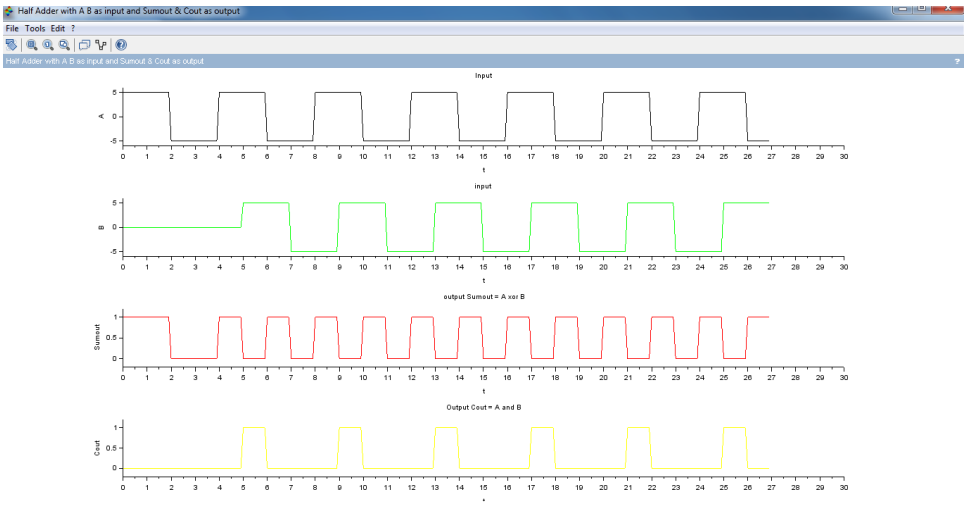

Figure 2.2: Half Adder design

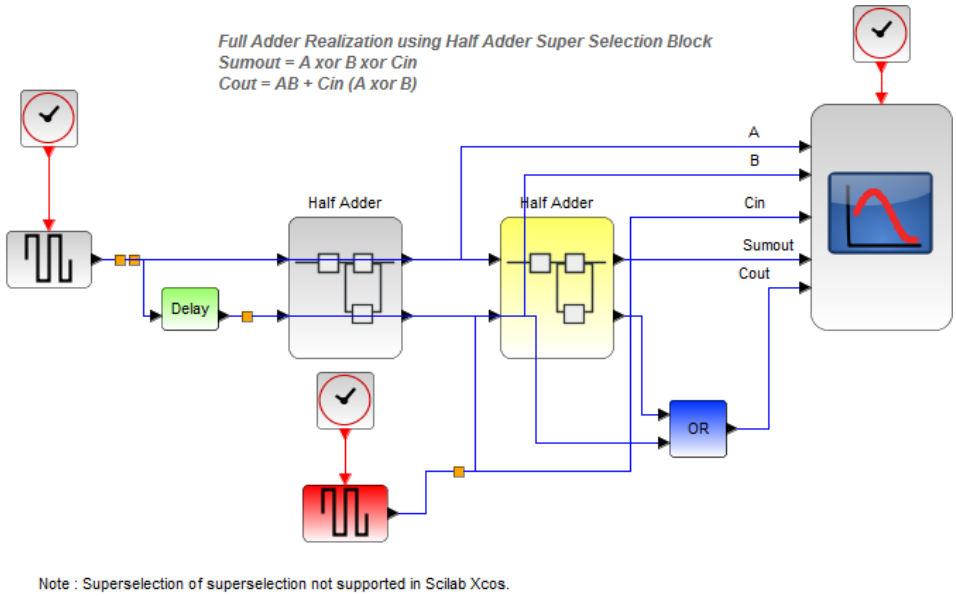

Figure 2.3: Full Adder Design

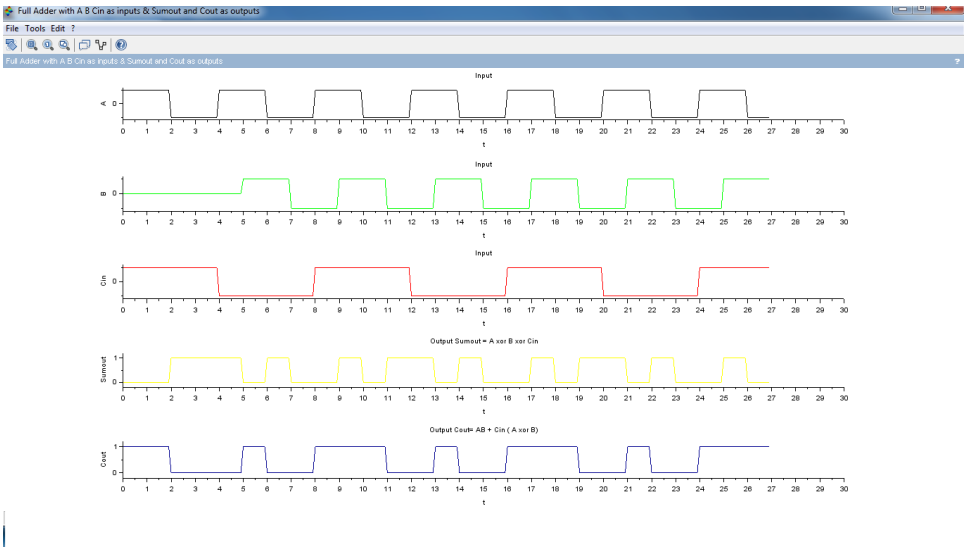

Figure 2.4: Full Adder Design

Experiment: 3

Half Subtractor and Full Subtractor Design & Implementation in Xcos

This code can be downloaded from the website wwww.scilab.in

This code can be downloaded from the website wwww.scilab.in

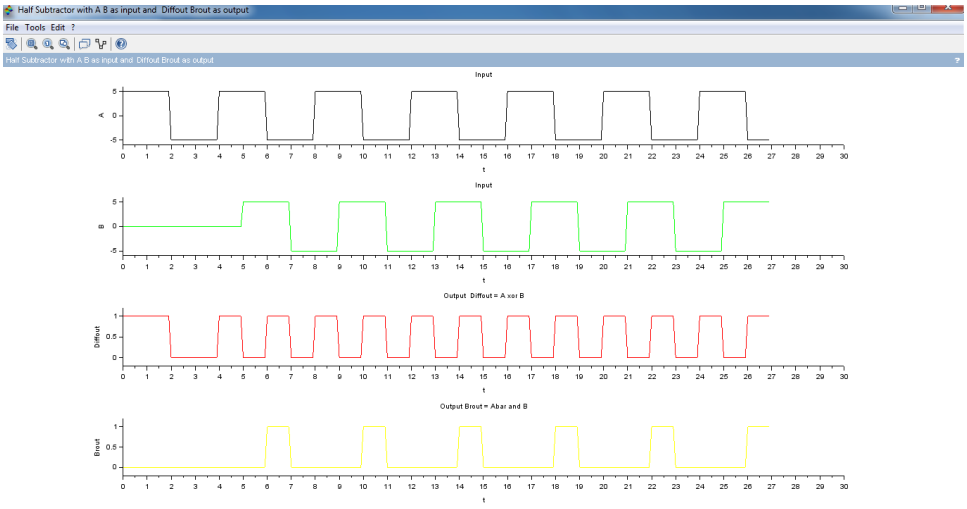

Figure 3.1: Half Subtractor design

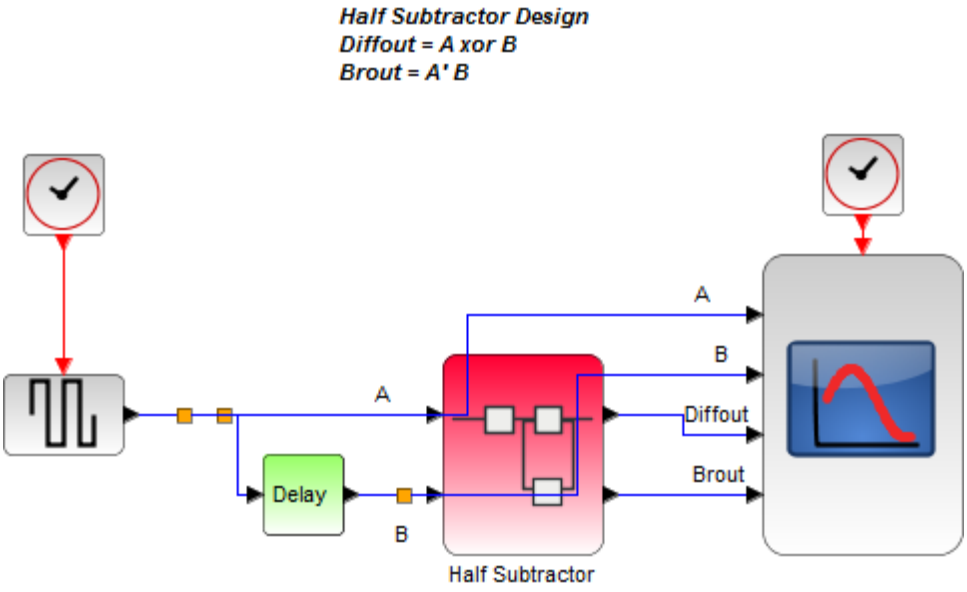

Figure 3.2: Half Subtractor design

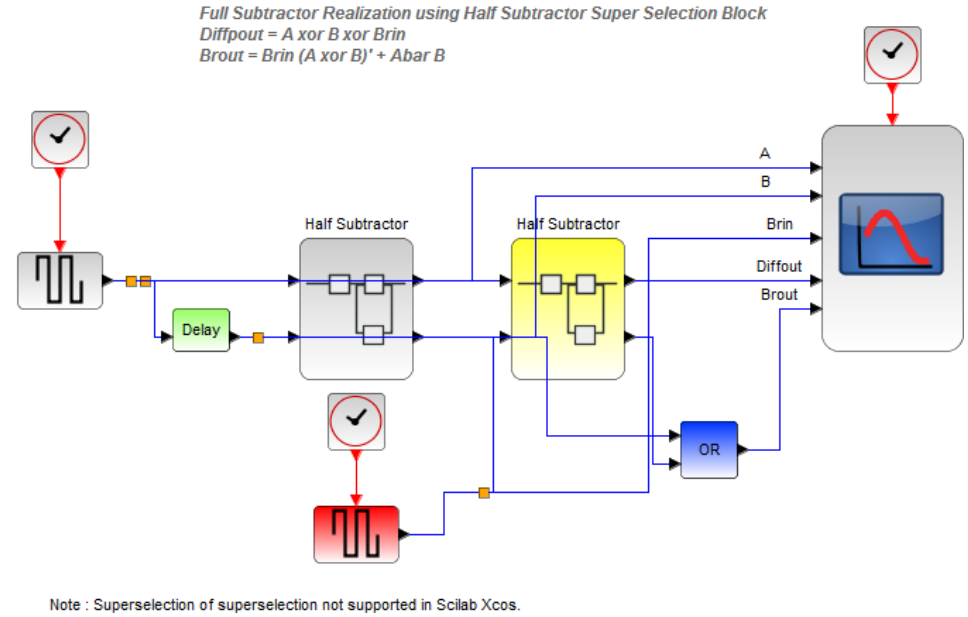

Figure 3.3: Full Subtractor Design

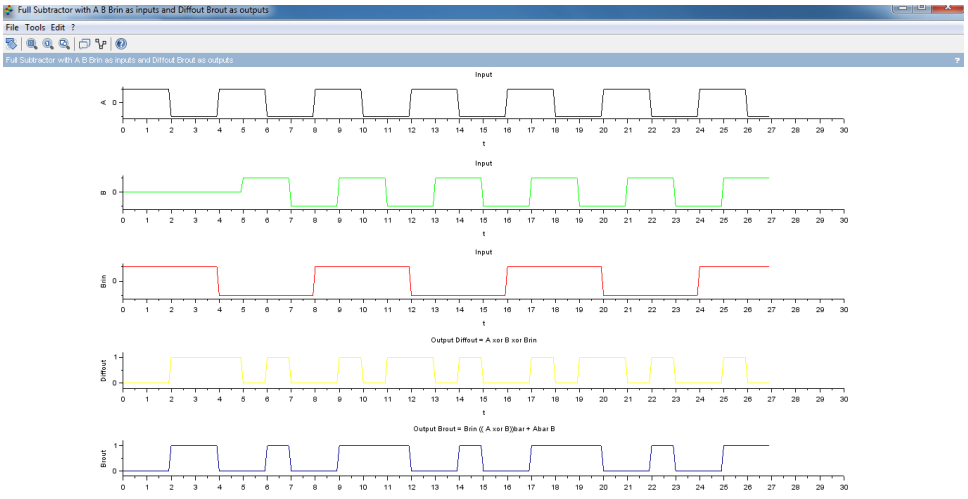

Figure 3.4: Full Subtractor Design

Experiment: 4

4 bit Ripple Carry Adder Design & Implementation in Xcos

This code can be downloaded from the website wwww.scilab.in

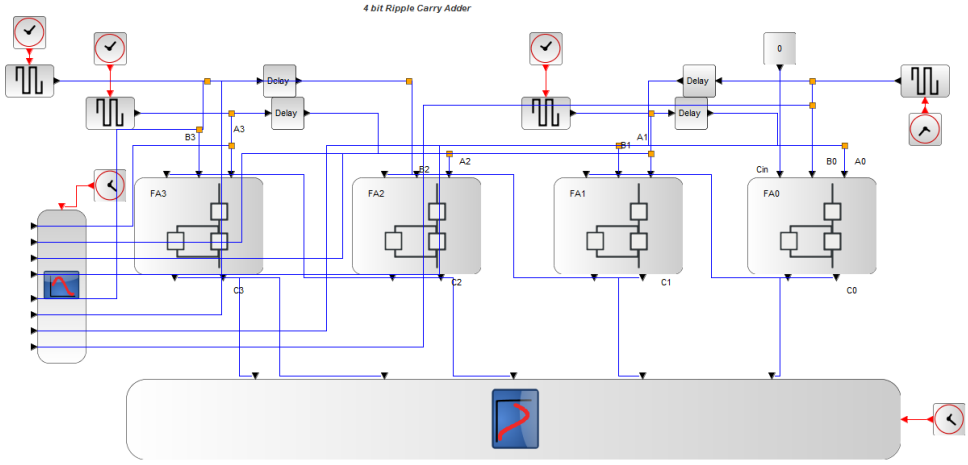

Figure 4.1: Ripple Carry Adder Design

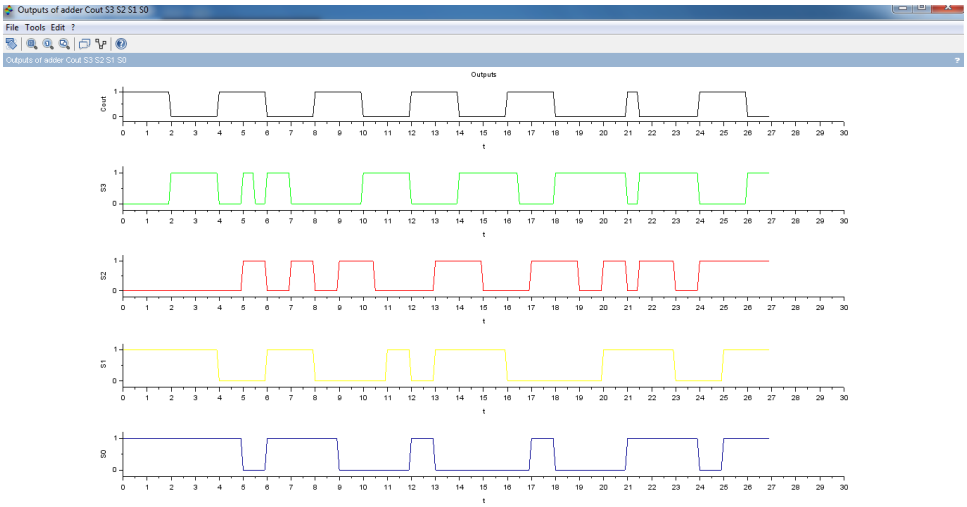

Figure 4.2: Ripple Carry Adder Design

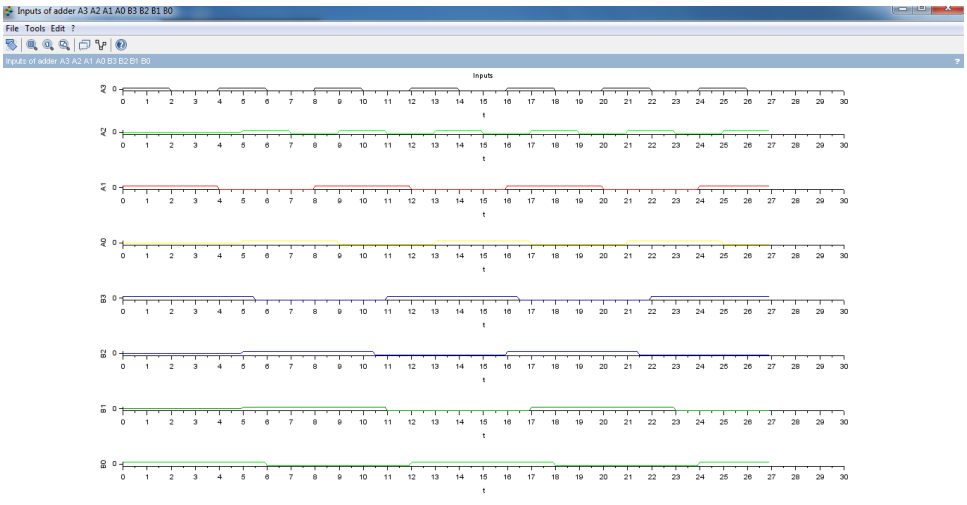

Figure 4.3: Ripple Carry Adder Design

Experiment: 5

BCD Adder Design & Implementation in Xcos

This code can be downloaded from the website wwww.scilab.in

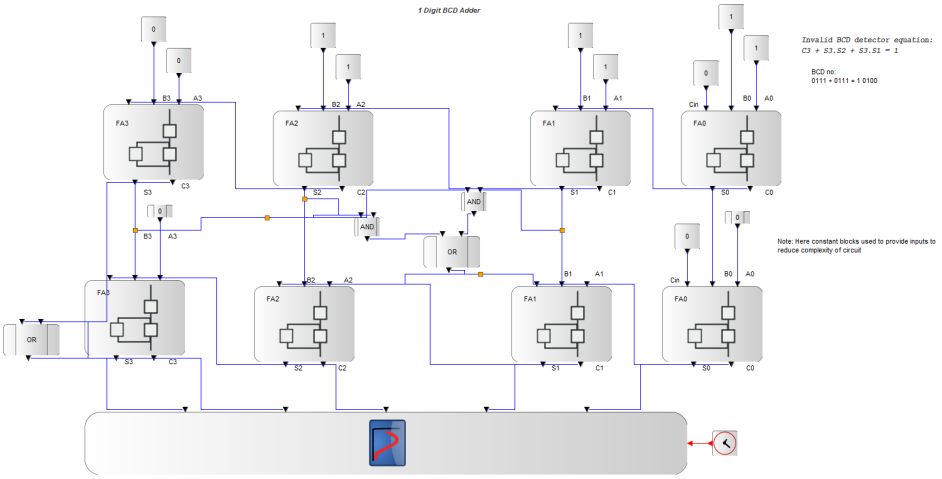

Figure 5.1: BCD Adder Design

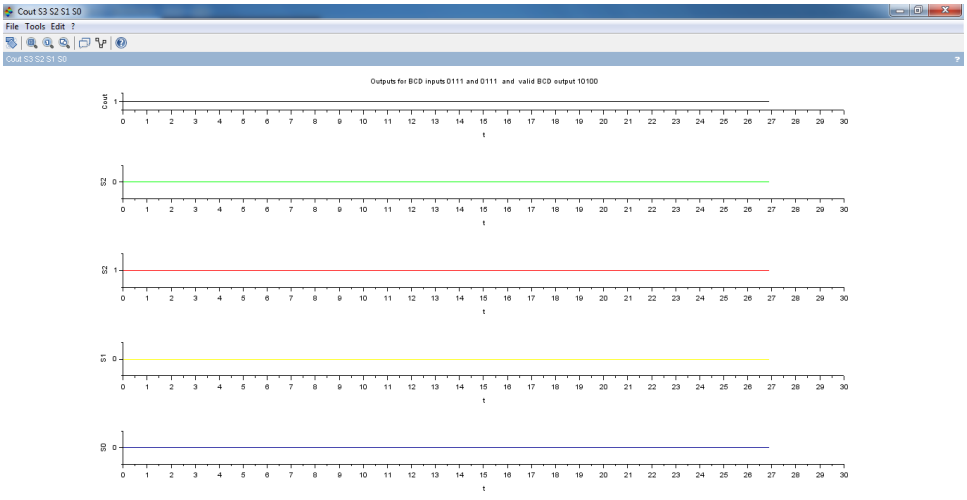

Figure 5.2: BCD Adder Design

Experiment: 6

Multiplexer Design and implementation & its application in Xcos

This code can be downloaded from the website wwww.scilab.in

This code can be downloaded from the website wwww.scilab.in

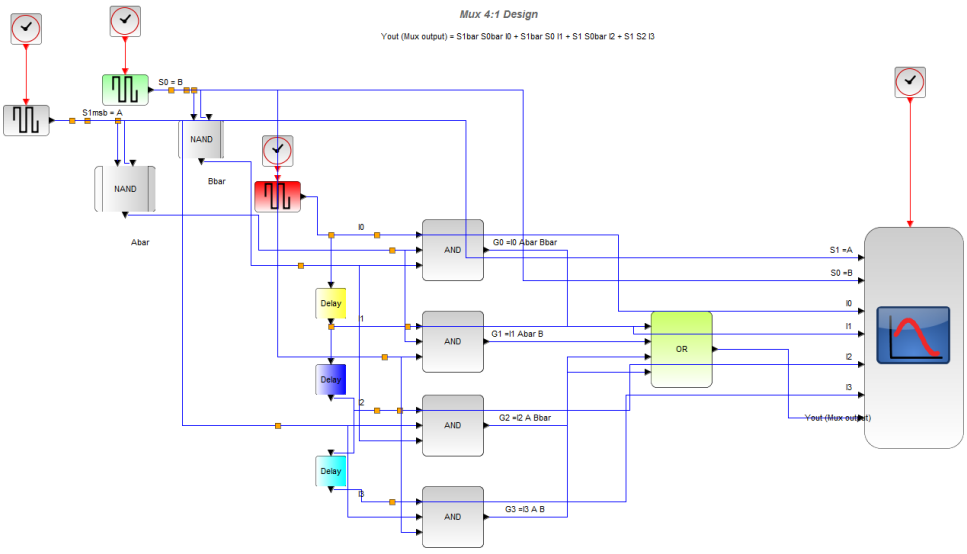

Figure 6.1: Multiplexer 4 to 1 design

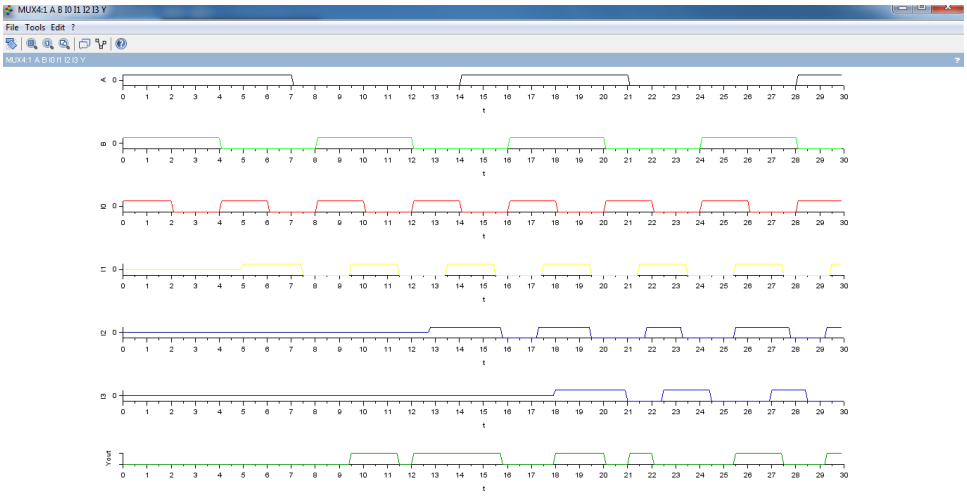

Figure 6.2: Multiplexer 4 to 1 design

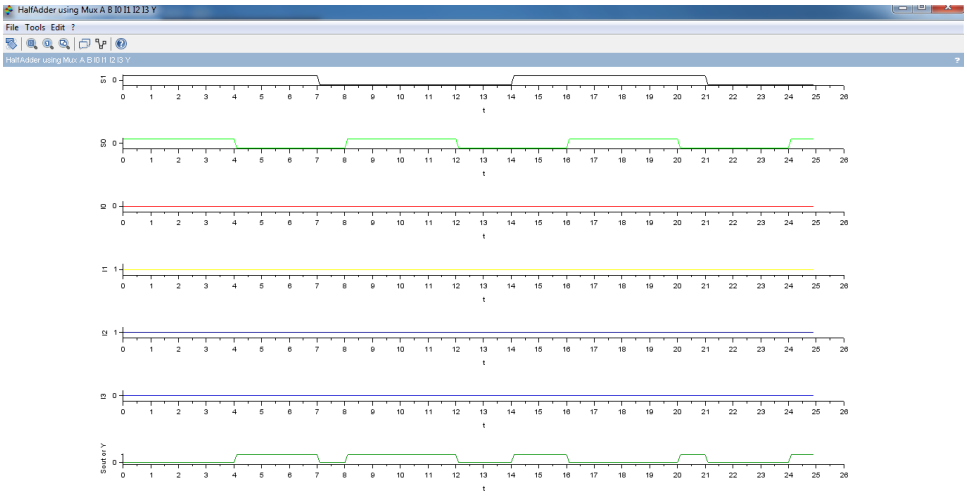

Figure 6.3: Multiplexer Application Half Adder design

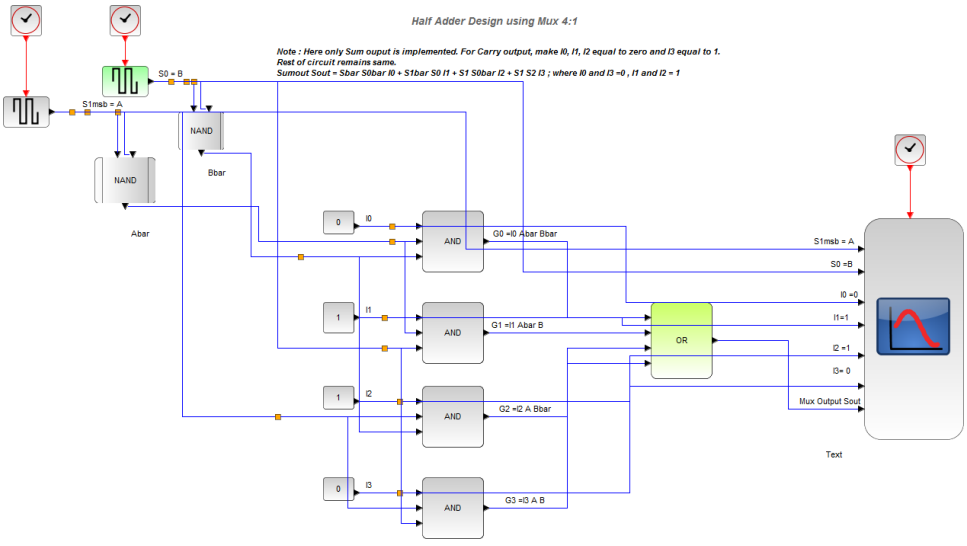

Figure 6.4: Multiplexer Application Half Adder design

Experiment: 7

Demultiplexer Design and implementation & its application in Xcos

This code can be downloaded from the website wwww.scilab.in

This code can be downloaded from the website wwww.scilab.in

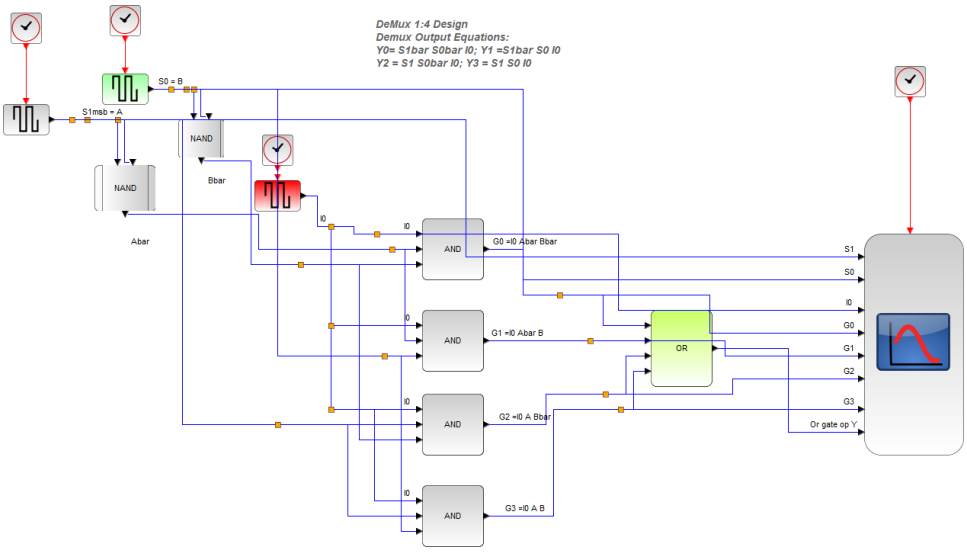

Figure 7.1: Demultiplxer 1 to 4

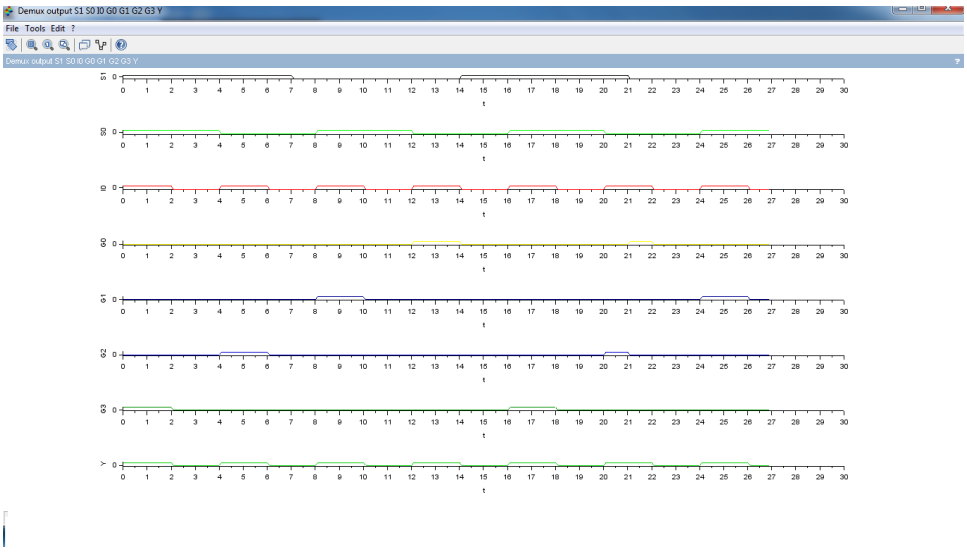

Figure 7.2: Demultiplxer 1 to 4

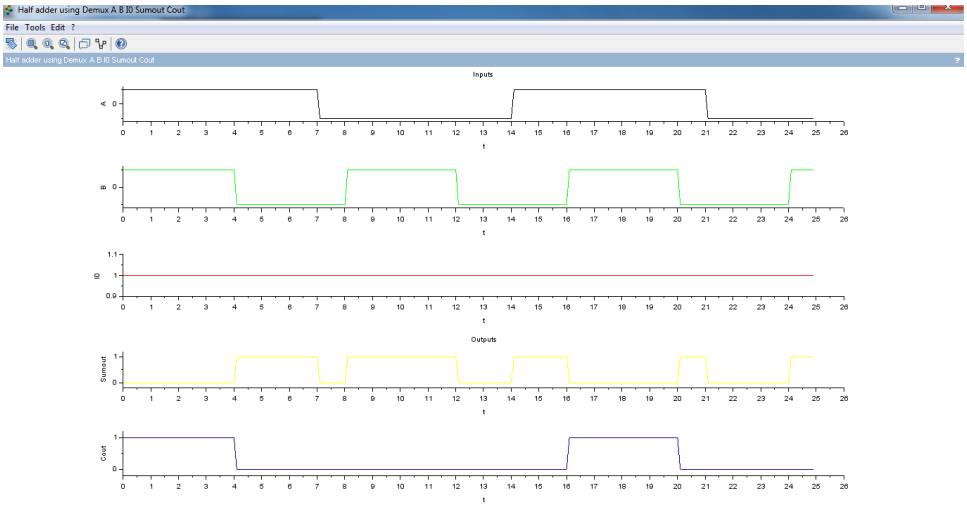

Figure 7.3: Demultiplxer Application Half Adder design

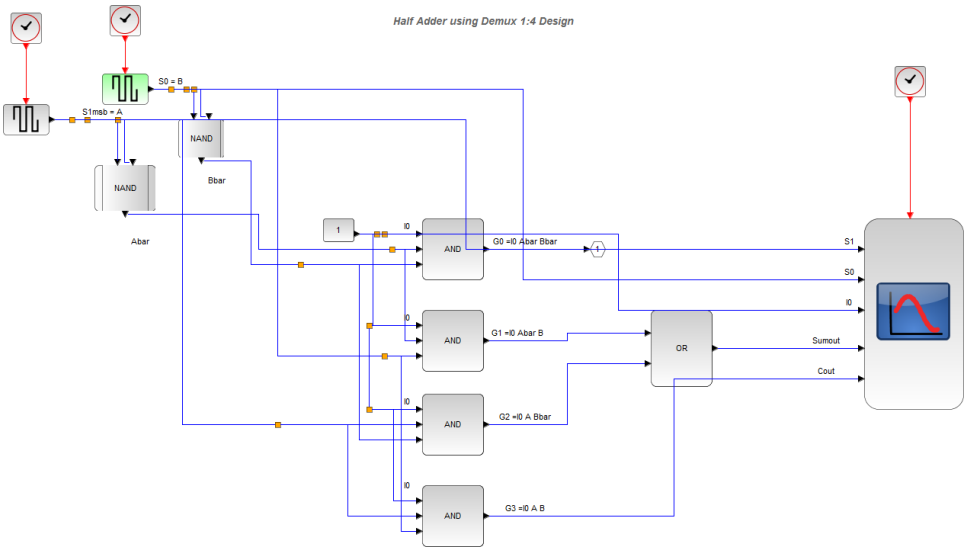

Figure 7.4: Demultiplxer Application Half Adder design

Experiment: 8

Decoder Design and implementation & its application in Xcos

This code can be downloaded from the website wwww.scilab.in

This code can be downloaded from the website wwww.scilab.in

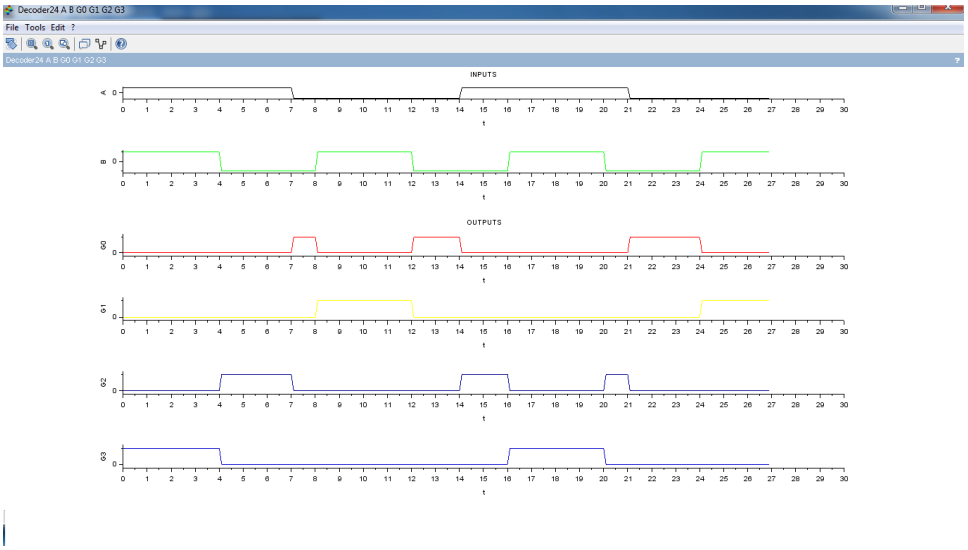

Figure 8.1: Decoder 2 to 4 design

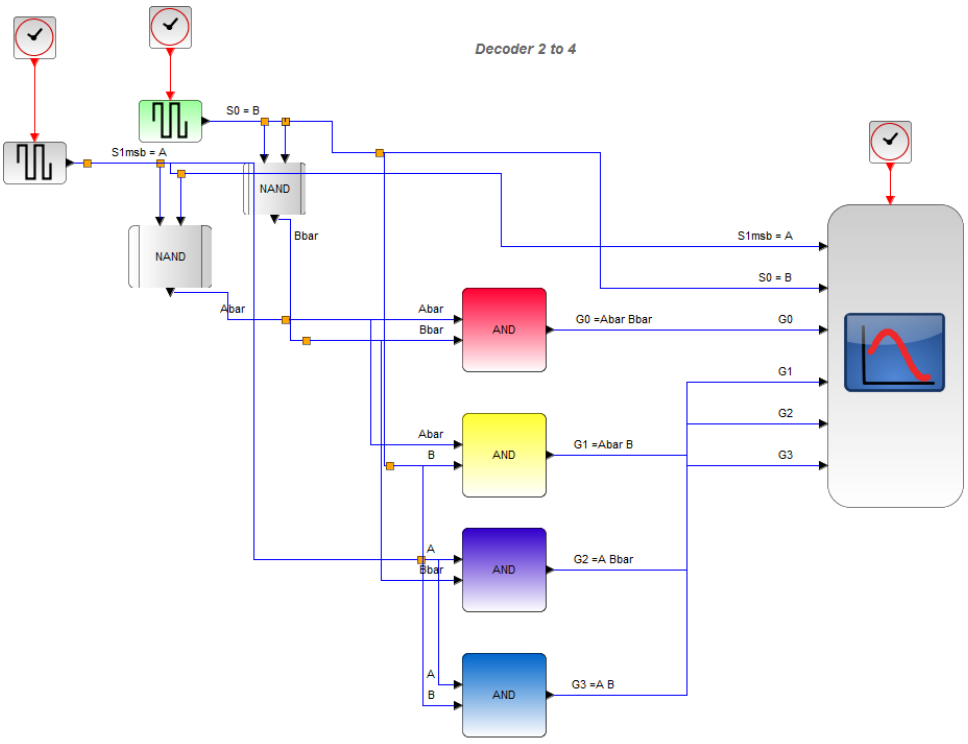

Figure 8.2: Decoder 2 to 4 design

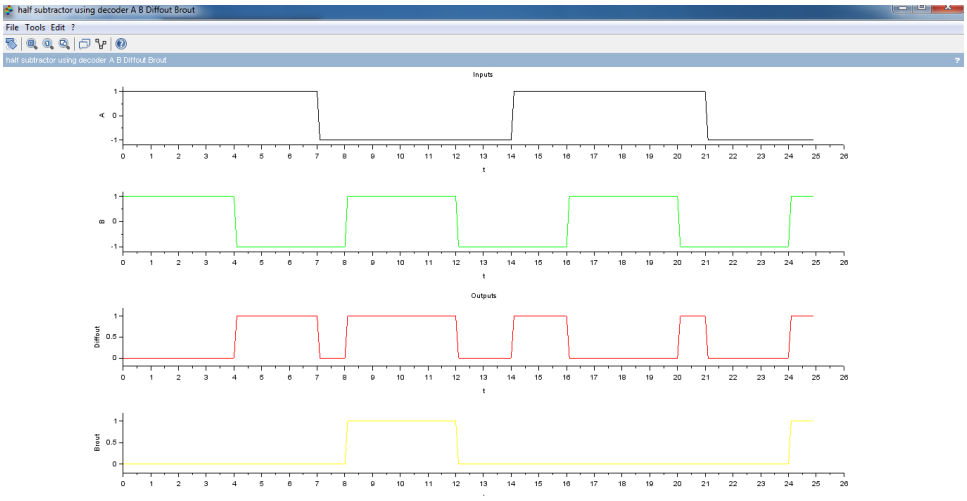

Figure 8.3: Decoder Application Half Subtractor design

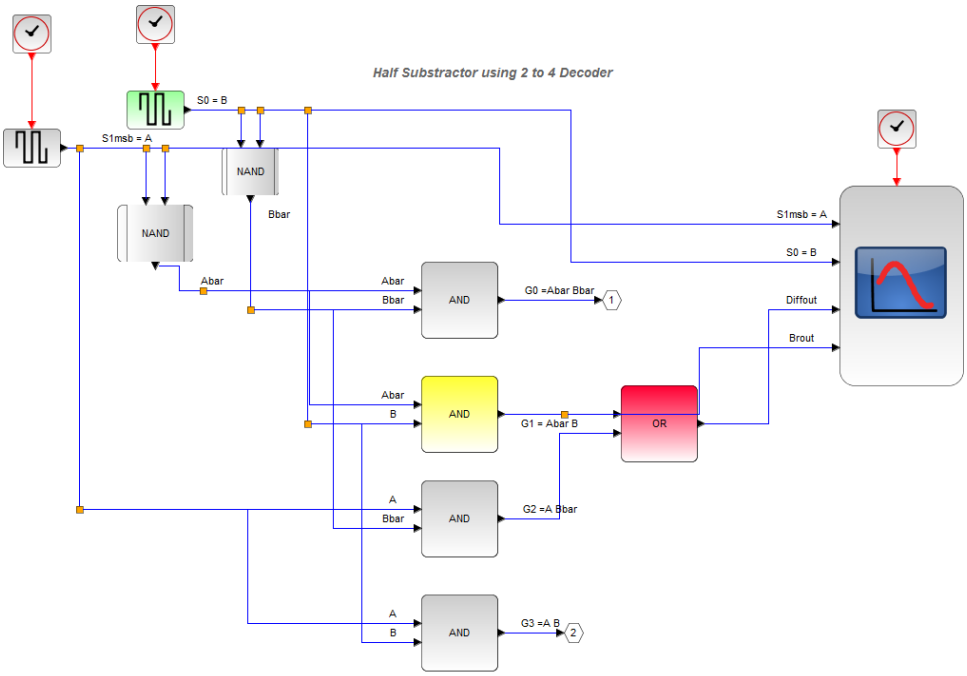

Figure 8.4: Decoder Application Half Subtractor design

Experiment: 9

Flip flop Design & Implementation in Xcos

This code can be downloaded from the website wwww.scilab.in

This code can be downloaded from the website wwww.scilab.in

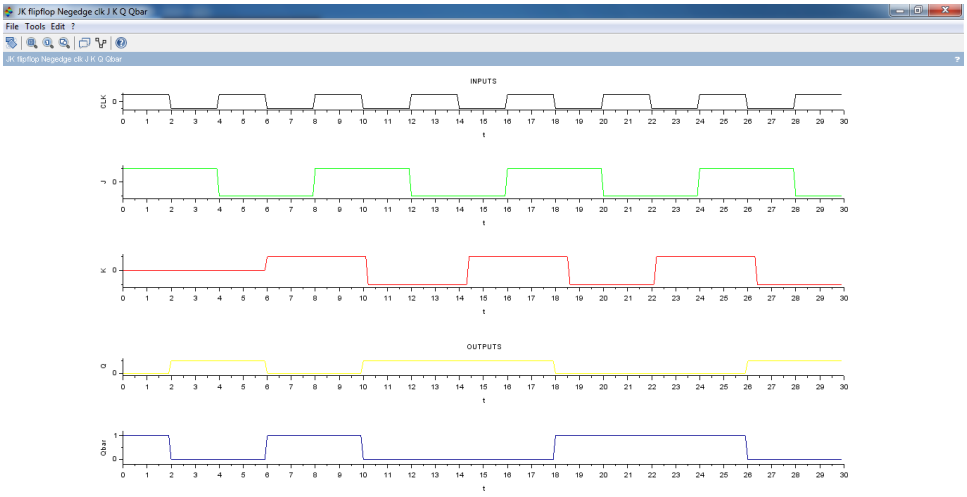

Figure 9.1: JK flip flop

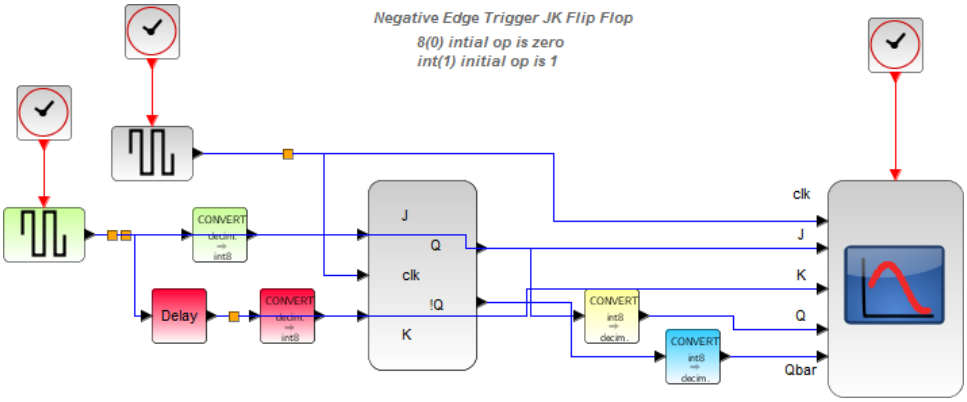

Figure 9.2: JK flip flop

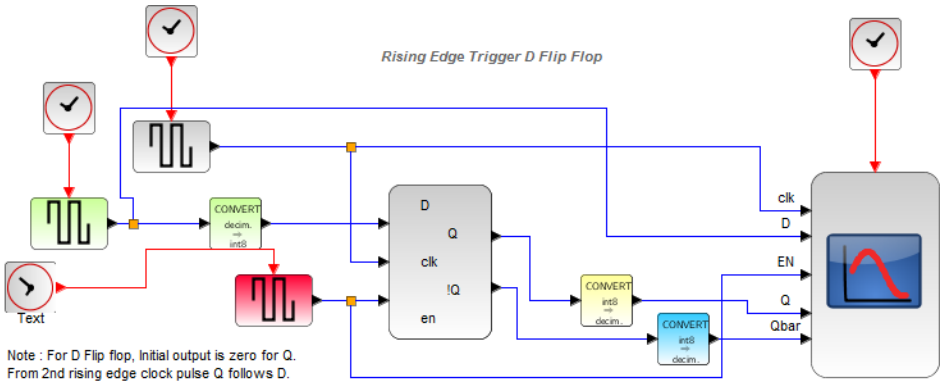

Figure 9.3: D flip flop

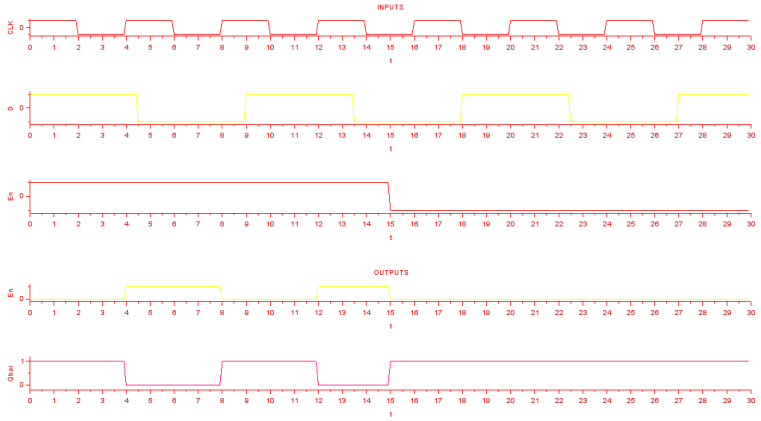

Figure 9.4: D flip flop

Experiment: 10

Asynchronous Counter Design & Implementation in Xcos

This code can be downloaded from the website wwww.scilab.in

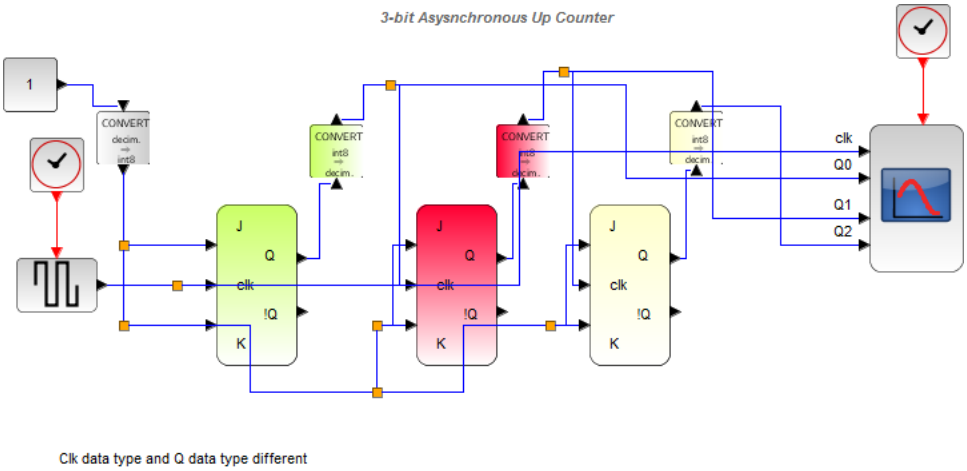

Figure 10.1: Asynchronous 3 bit up counter design

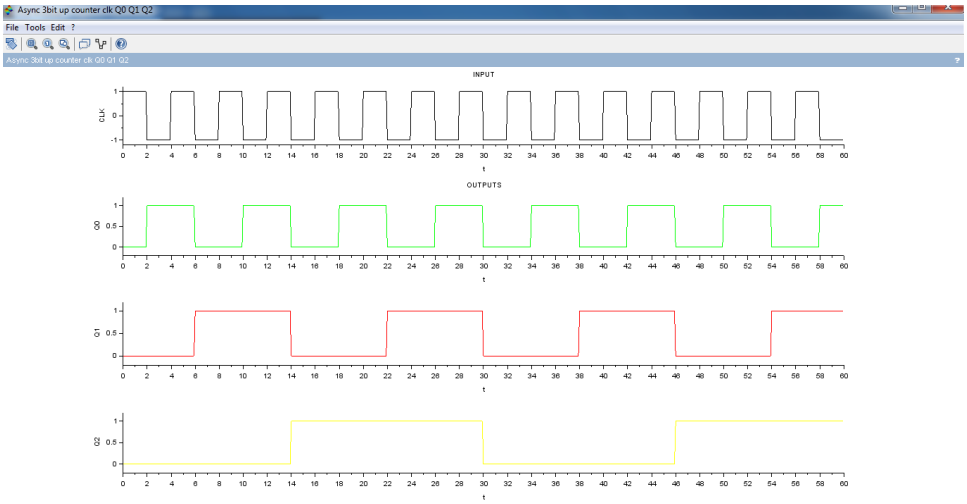

Figure 10.2: Asynchronous 3 bit up counter design

Experiment: 11

Synchronous Counter Design & Implementation in Xcos

This code can be downloaded from the website wwww.scilab.in

This code can be downloaded from the website wwww.scilab.in

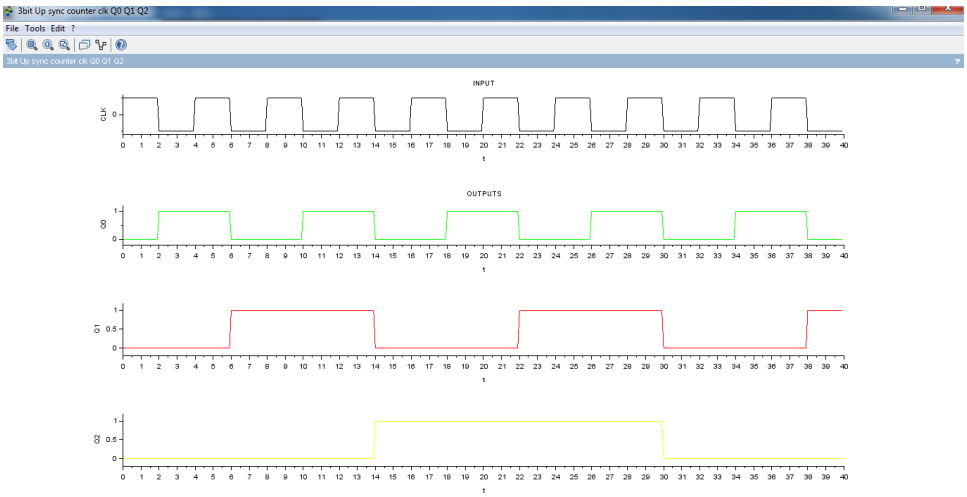

Figure 11.1: Three bit up synchronous counter

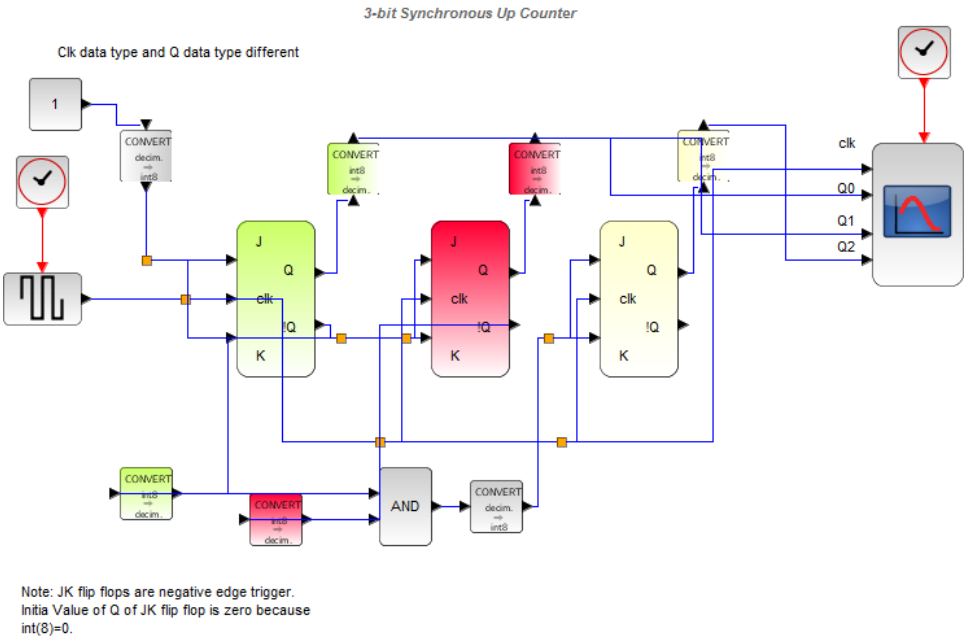

Figure 11.2: Three bit up synchronous counter

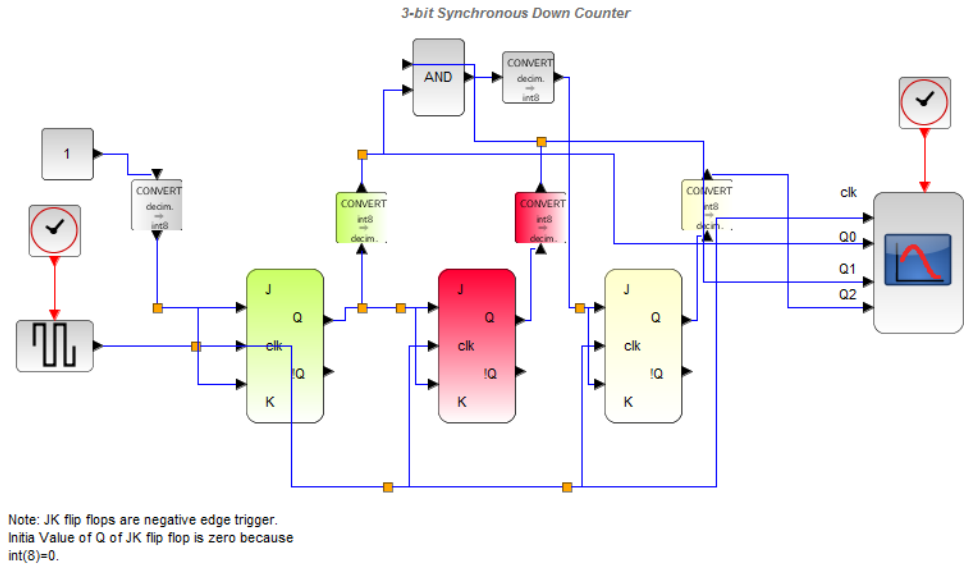

Figure 11.3: Three bit down synchronous counter

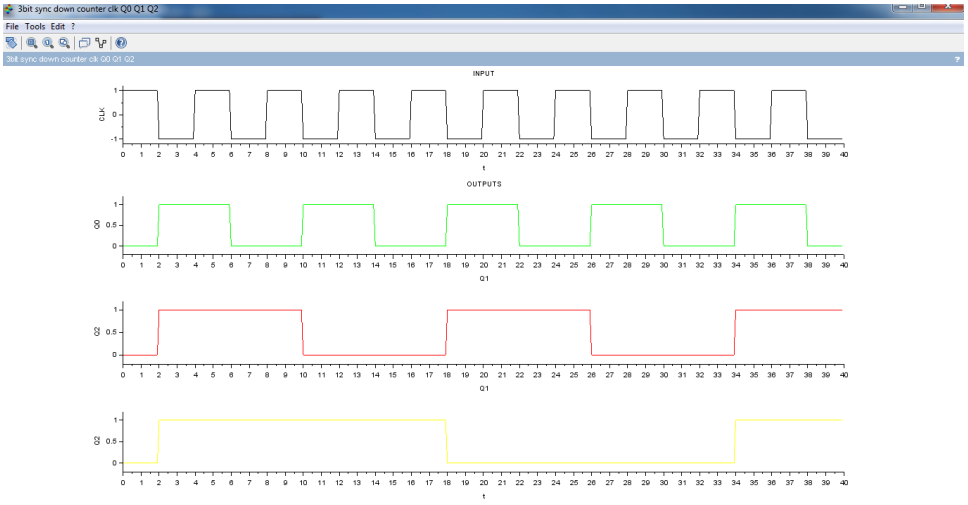

Figure 11.4: Three bit down synchronous counter

Experiment: 12

Code Converter Design (eg.binary to gray code conversion) & Implementation in Xcos

This code can be downloaded from the website wwww.scilab.in

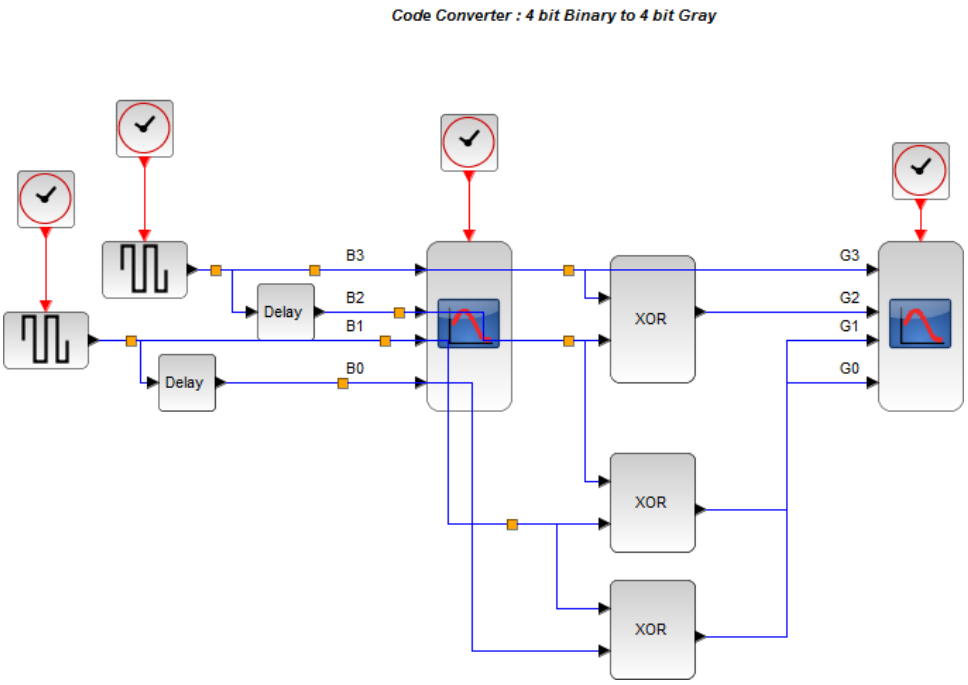

Figure 12.1: Binary to Gray code converter

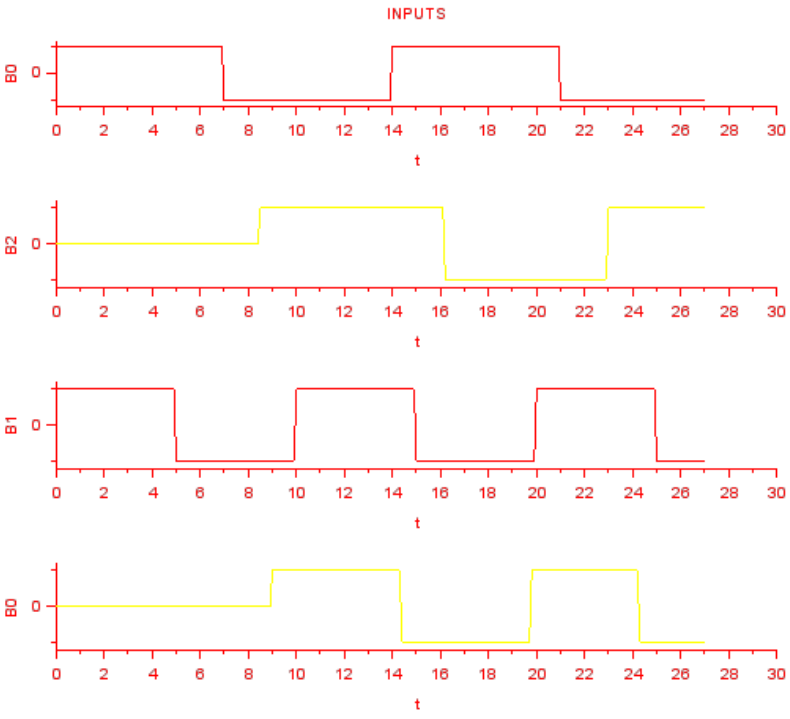

Figure 12.2: Binary to Gray code converter

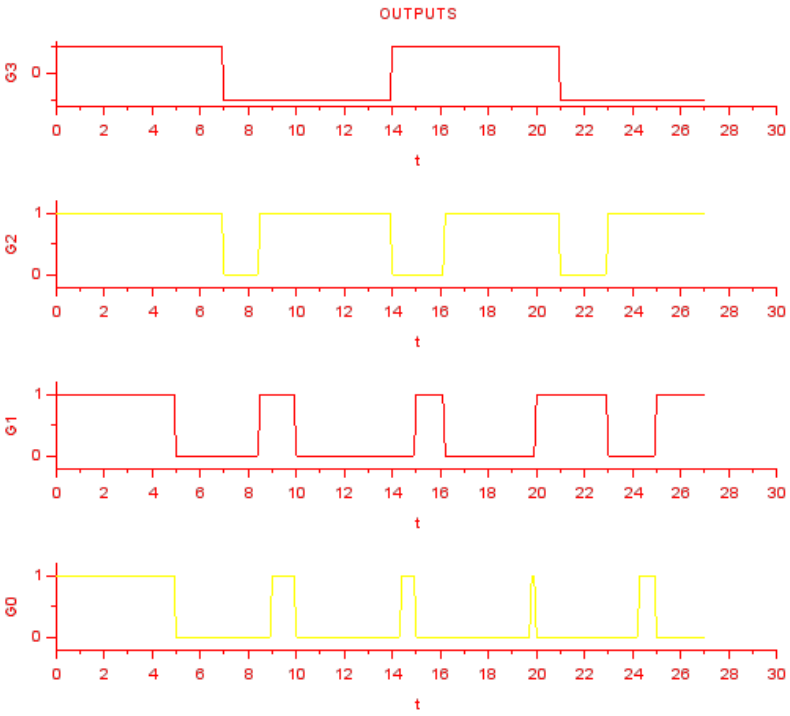

Figure 12.3: Binary to Gray code converter

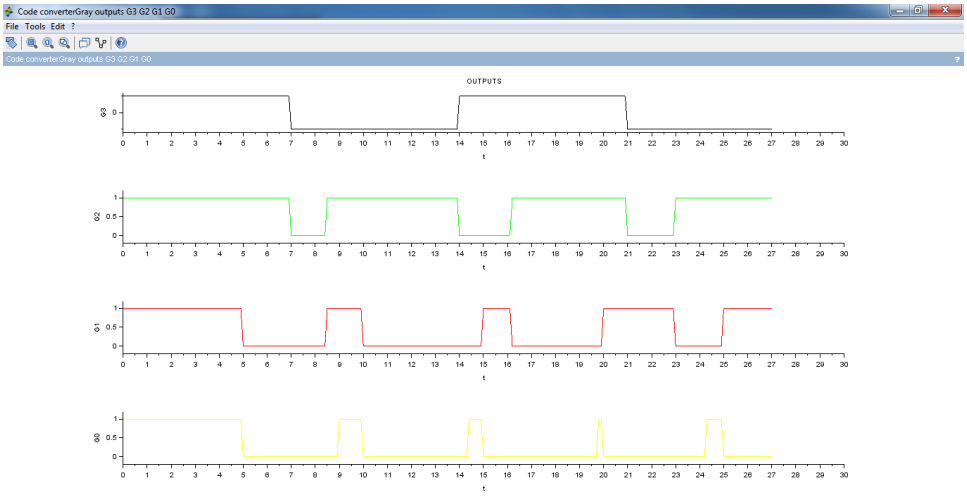

Figure 12.4: Binary to Gray code converter