Scilab Manual for Digital VLSI Lab with top to bottom approach by Dr Sandhya Save Electronics Engineering Thakur College Of Engineering And Technology, Kandivali[1]

Solutions provided by
Dr Sandhya Save
Electronics Engineering
Thakur College Of Engineering And Technology, Kandivali

November 23, 2026

[1]Funded by a grant from the National Mission on Education through ICT, http://spoken-tutorial.org/NMEICT-Intro. This Scilab Manual and Scilab codes written in it can be downloaded from the "Migrated Labs" section at the website http://scilab.in

Contents

List of Scilab Solutions 3

1 Design of NAND gate using CMOS technology 5

2 Design of NOR gate using CMOS technology 7

3 Design of 4:1 multiplexer IC 9

4 Design of 8:1 multiplexer IC using 4:1 mux tree 11

5 Design of 1:8 demultiplexer IC 13

List of Experiments

List of Figures

1.1 NAND Gate 6
1.2 NAND Gate 6

2.1 NOR Gate 8
2.2 NOR Gate 8

3.1 Mux4 10
3.2 Mux4 10

4.1 multiplexer 12
4.2 multiplexer 12

5.1 demux 14

Experiment: 1

Design of NAND gate using CMOS technology

This code can be downloaded from the website wwww.scilab.in

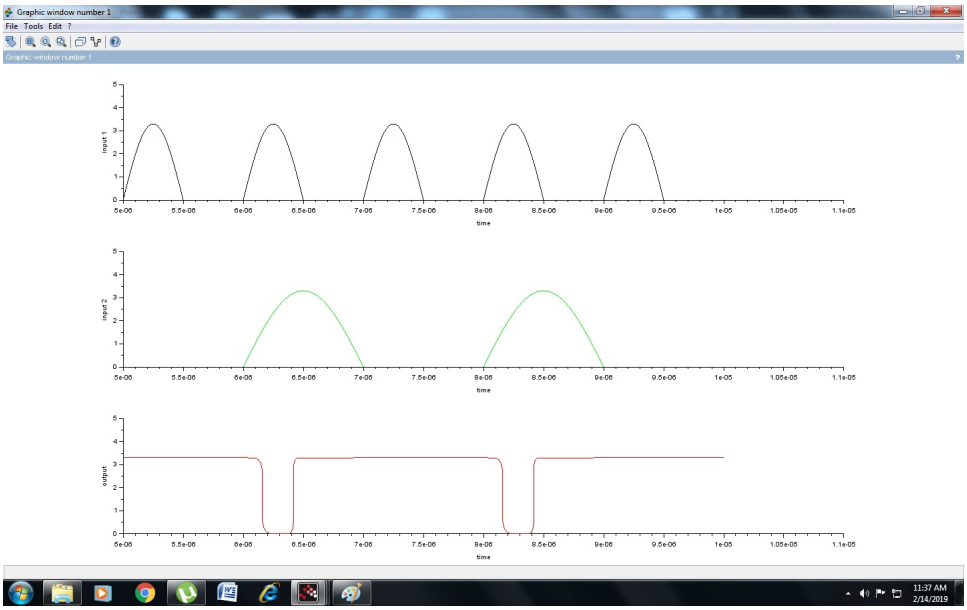

Figure 1.1: NAND Gate

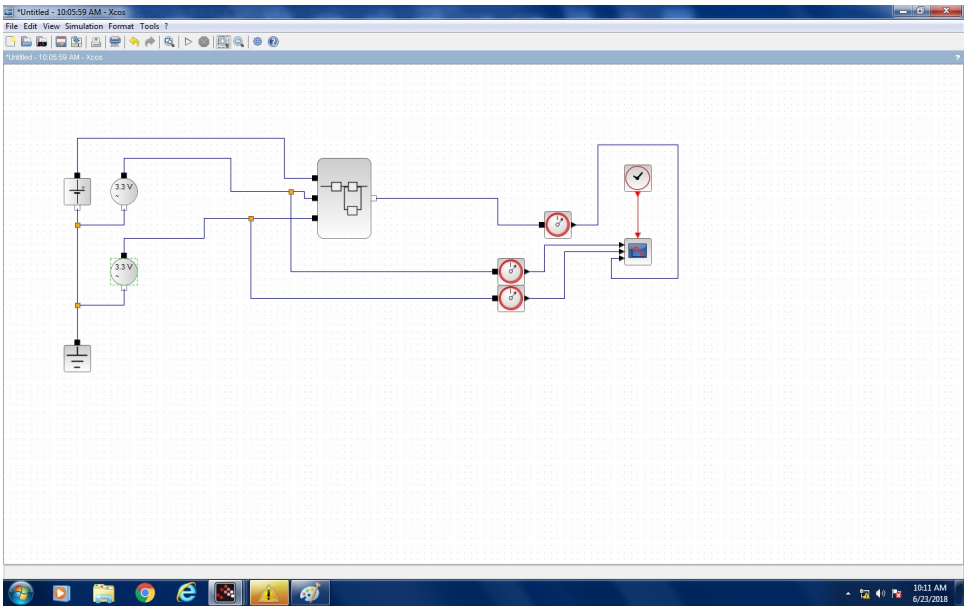

Figure 1.2: NAND Gate

Experiment: 2

Design of NOR gate using CMOS technology

This code can be downloaded from the website wwww.scilab.in

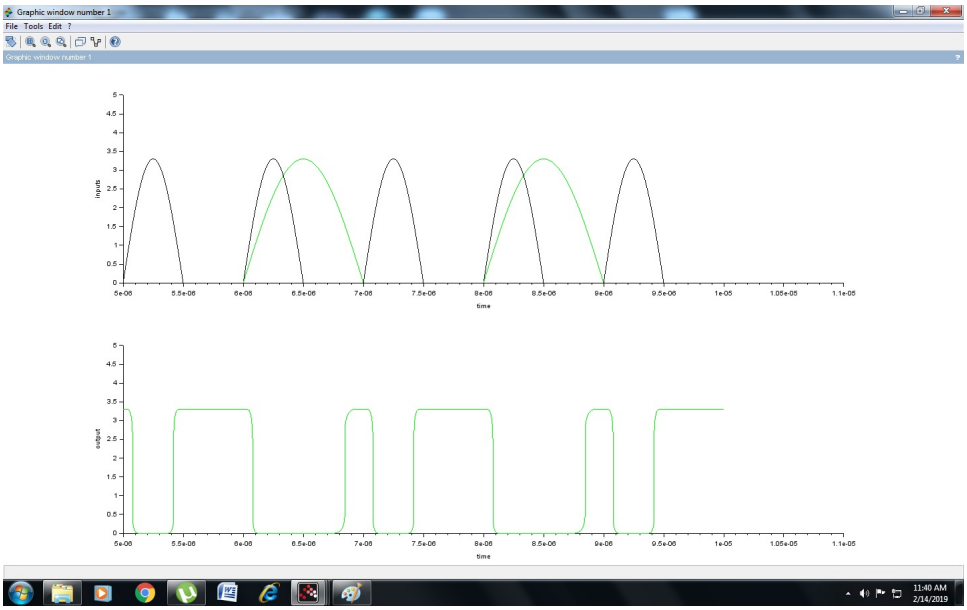

Figure 2.1: NOR Gate

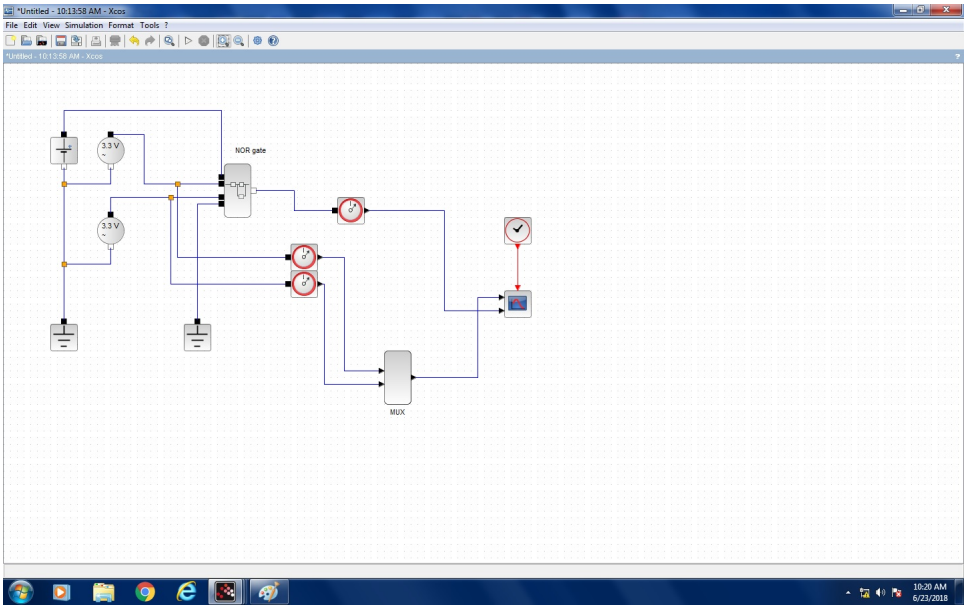

Figure 2.2: NOR Gate

Experiment: 3

Design of 4:1 multiplexer IC

This code can be downloaded from the website wwww.scilab.in

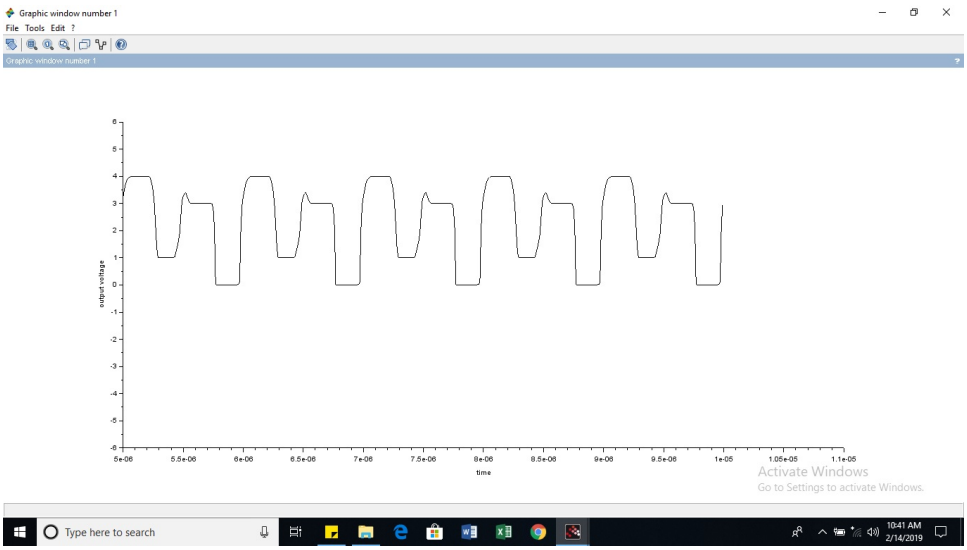

Figure 3.1: Mux4

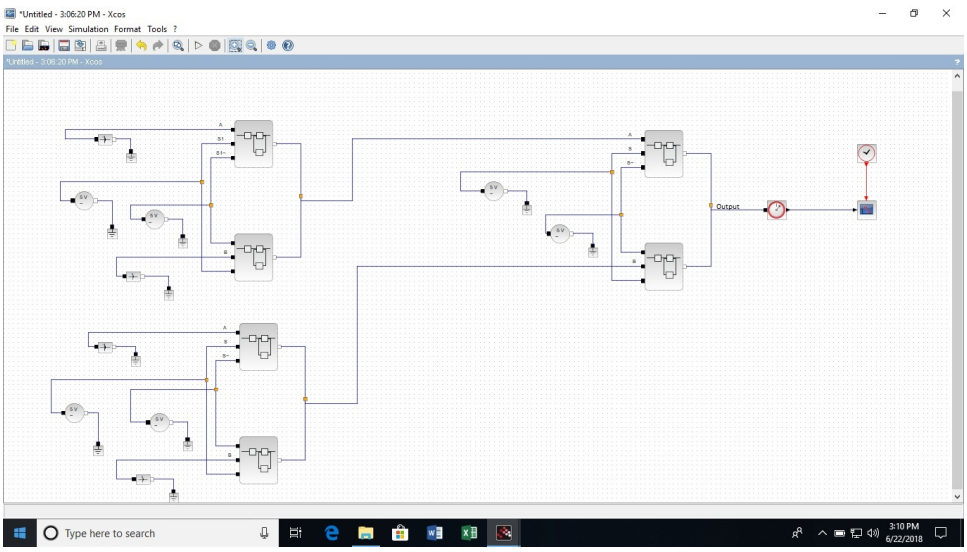

Figure 3.2: Mux4

Experiment: 4

Design of 8:1 multiplexer IC using 4:1 mux tree

This code can be downloaded from the website wwww.scilab.in

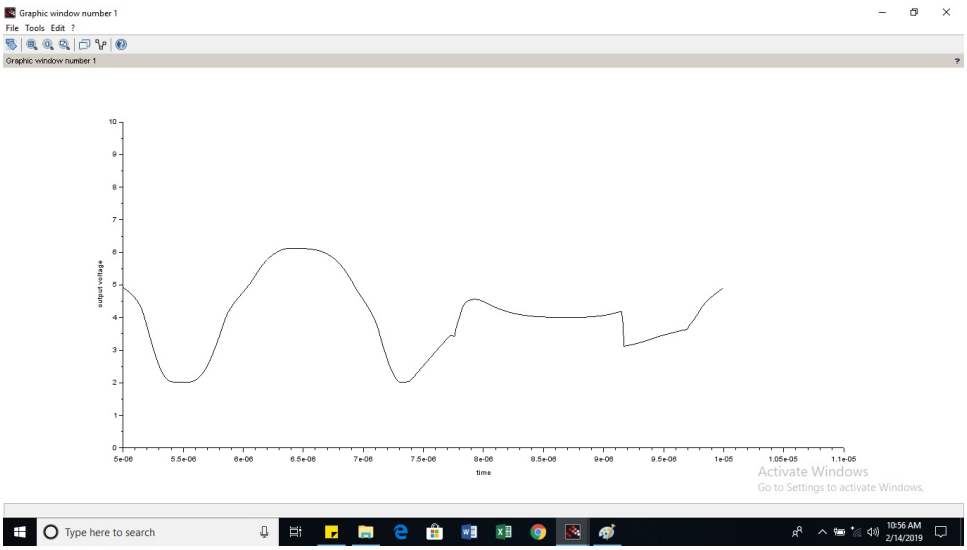

Figure 4.1: multiplexer

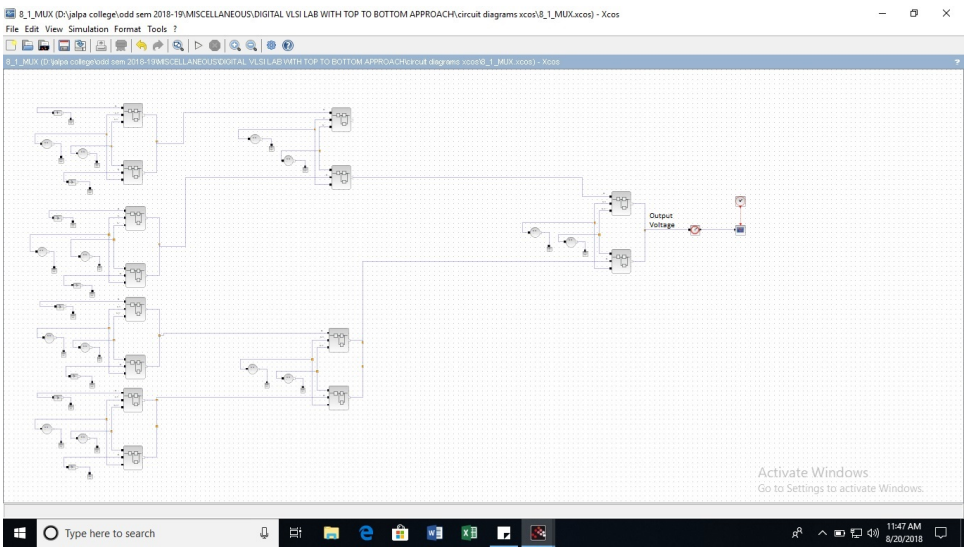

Figure 4.2: multiplexer

Experiment: 5

Design of 1:8 demultiplexer IC

This code can be downloaded from the website wwww.scilab.in

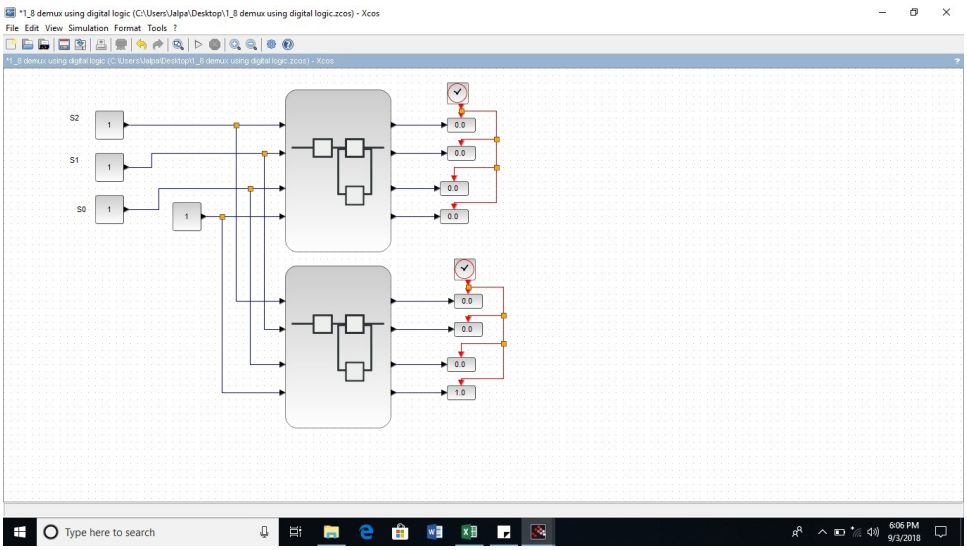

Figure 5.1: demux