Scilab Manual for Electronic Design and Automation by Prof Kavya Manohar Electronics Engineering Aryanet Institute of Technology[1]

Solutions provided by
Mr NILESH GUPTA
Others
Mumbai University/PVPPCOE

November 25, 2026

[1]Funded by a grant from the National Mission on Education through ICT, http://spoken-tutorial.org/NMEICT-Intro. This Scilab Manual and Scilab codes written in it can be downloaded from the "Migrated Labs" section at the website http://scilab.in

Contents

List of Scilab Solutions 3

1 Solve quadratic equations containing complex numbers and matrix multiplication 5

2 Generate and plot various signals like sine square, pulse in same window. 7

3 Obtain different types of plots (2D/3D, surface plot, polar plot) 9

4 Plot the diode/transistor characteristics. 11

5 Solve node, mesh and loop equations of simple electrical/network circuits. 13

6 Find the poles and zeros hence plot the transfer functions/polynomials 15

7 Read floating point numbers from a formatted file and sort it in ascending order and save in another text file 17

8 Plot a full wave rectified waveform using Fourier series. 19

List of Experiments

Solution 1.0	Experiment number 1	5
Solution 2.0	Experiment number 2	7
Solution 3.0	Experiment number 3	9
Solution 4.0	Experiment number 4	11
Solution 5.0	Experiment Number 5	13
Solution 6.0	Experiment number 6	15
Solution 7.0	Experiment Number 7	17
Solution 8.0	Experiment Number 8	19
AP 1	text file for Experiment number 7	21
AP 2	Circuit Diagram For Experiment 5	22

List of Figures

Experiment: 1

Solve quadratic equations containing complex numbers and matrix multiplication

Scilab code Solution 1.0 Experiment number 1

```
1 //AIM: Solve quadratic equations containing complex
     numbers & matrix
2 //multiplications
3 //Software version Scilab 5.5.2
4 //OS Windows 7
5
6 clc;
7 clear;
8
9 //consider quadratic equation a(x^2)+(b*x)+c=0 to be
     solved.
10 x=poly(0,"x")
11 a=input('Enter the coefficients of quadratic
     equation(Eg: To solve a(x^2)+(b*x)+c=0, enter [a
     b c])');
12 X=[x^2 x 1]
13 h=a*X'
```

```
14 //h=a*(x^2)+(b*x)+c
15 disp(h)
16 root1=((-a(2))+sqrt((a(2)^2)-4*a(1)*a(3)))/(2*a(1))
17 disp(root1,"1st root of the equation is =")
18 root2=((-a(2))-sqrt((a(2)^2)-4*a(1)*a(3)))/(2*a(1))
19 disp(root2,"2nd root of the equation is")
20
21 //Solving Linear equations in two variables
22 //let two equations be
23 //1: a1.x+b1.y=c1
24 //2: a2.x-b2.y=c2
25 C=input('Enter the coefficients of first linear
      equation in two variables(a1*x+b1*y=c1 may be
      entered as [a1 b1 -c1]:')
26 D=input('Enter the coefficients of second linear
      equation in two variables(a2*x+b2*y=c2 may be
      entered as [a2 b2 -c2]:')
27 a=[C(1:2);D(1:2)];
28 d=[C(3);D(3)];
29 X=linsolve(a,d);
30 mprintf("X=%f\n",X);
```

Experiment: 2

Generate and plot various signals like sine square, pulse in same window.

Scilab code Solution 2.0 Experiment number 2

```
1 //Aim:Generate and plot various signals like sine,
     square,pulse in same window.
2 //Software version Scilab 5.5.2
3 //OS Windows 7
4
5 clc;
6 clear;
7
8 t=-10:0.05:10;
9 a=1;
10 b=t;
11 //To plot the sine wave
12 x1=sin(t);
13 subplot(3,1,1)
14 plot(t,x1)
15 xlabel('time')
16 ylabel('x1[t]')
```

```
17 title('sine wave')
18
19 //To plot the square wave
20 x2=squarewave(t);
21 subplot(3,1,2)
22 plot(t,x2)
23 xlabel('time')
24 ylabel('x2[t]')
25 title('square wave')
26
27 //To plot the impulse function
28 x3=a*(t==0)
29 subplot(3,1,3)
30 plot(t,x3)
31 xlabel('time')
32 ylabel('x3[t]')
33 title('impulse function')
```

Experiment: 3

Obtain different types of plots (2D/3D, surface plot, polar plot)

Scilab code Solution 3.0 Experiment number 3

```
1 //Aim:Obtain different types of plots (2D,surface
    plot,polar plot).
2 //Software version Scilab 5.5.2
3 //OS Windows 7
4
5 clear;
6 clc;
7 //plot for 2D
8 figure()
9 x =-10: 0.1 : 10;// Define your x-values
10 y =cos(x).*sinc(x);// Define your function
11 plot(x, y)
12 title('2D plot')
13 xlabel('x axis');
14 ylabel('y axis');
15 legend('y =cos(x).*sinc(x)');
16
```

```
17 //plot for polar plot
18 figure()
19 t = linspace(0, 2*%pi, 100);
20 r =sqrt(abs(2 * sinc(5*t)));
21 title('polar plot')
22 polarplot(t, r);
23
24 //plot for surface plot
25 figure()
26 t=[0:0.3:2*%pi]';
27 z=sin(t)*cos(t');
28 xlabel('x axis');
29 ylabel('y axis');
30 zlabel('z axis');
31 title('surface plot');
32 plot3d(t,t,z)
```

Experiment: 4

Plot the diode/transistor characteristics.

Scilab code Solution 4.0 Experiment number 4

```
1  //AIM: Plot the diode/transistor characteristics
2  //Software version Scilab 5.5.2
3  //OS Windows 7
4
5  clear;
6  clc;
7
8  Vd=0:0.1:1//diode voltage
9  Is=10^(-15)//assume reverse biased saturation
       current
10 n=1//Emission coefficient
11 Temp=32//temperature in degrees
12 T=Temp+273//temperature in Kelvin
13 k=1.38*10^(-23)//Boltzmann's Constant
14 q=1.6*10^(-19)//Charge of electron
15 Vt=(k*T)/q//thermal voltage
16 Id=Is*(exp(Vd/(n*Vt))-1)//Diode current
17 subplot(1,2,1)
18 plot(Vd,Id)
```

```
19 xlabel("Vd in volts")
20 ylabel("Id in mA")
21 title("Characteristic of diode when forward biased")
```

Experiment: 5

Solve node, mesh and loop equations of simple electrical/network circuits.

Scilab code Solution 5.0 Experiment Number 5

```
1 //Aim: Solve node,mesh and loop equations of simple
     electrical/network circuits.
2 //Software version :Scilab 5.5.2
3 //OS: Windows 7
4 //Toolbox: SIVP_0.5.3.2
5
6 clc;
7 clear;
8
9 //**PLEASE REFER THE DEPENDENCY FILE i.e. the
     circuit **
10
11 //Mesh/loop analysis
12
13 V=10//in volts
14 R1=1000//in ohms
15 R3=1000//in ohms
```

```
16 R4=2000//in ohms
17 R2=2000//in ohms
18 R22=(R2*R4)/(R2+R4)
19 disp("Ohms",R22,"R22=")
20 //10==(I*R1)+(I*R2)+(I*R3)
21 I=V/(R1+R22+R3)
22 disp("Ampere",I,"I=")
23 I1=I*(R2/(R4+R2))
24 disp("Ampere",I1,"I1=")
25
26 //Nodal analysis
27 //((Va-10)/(1000+1000))+(Va/2000)+(Va/2000)==0
28 Va=(V/(R1+R3))/((1/R2)+(1/R4)+(1/(R1+R3)))
29 disp("Volts",Va,"Va=")
```

---

check Appendix AP 2 for dependency:

`CiruitForExp5.jpg`

Experiment: 6

Find the poles and zeros hence plot the transfer functions/polynomials

Scilab code Solution 6.0 Experiment number 6

```
1 //AIM:Find the poles and zeros hence plot the
     transfer functions/polynomials
2 //Software version Scilab 5.5.2
3 //OS Windows 7
4
5 clear;
6 clc;
7
8 //Consider the transfer function
9 //T.F=(s*(s+2))/(s^2+2*s+2)
10
11 x=poly(0,"x")
12 a1=input("Enter the value of coefficient of a=");
13 b1=input("Enter the value of coefficient of b=");
14 c1=input("Enter the value of coefficient of z=");
15 zero1=((-b1)+sqrt((b1^2)-4*a1*c1))/(2*a1)
16 printf("1st zero = %g\n",zero1)
```

```
17 zero2=((-b1)-sqrt((b1^2)-4*a1*c1))/(2*a1)
18 printf("2nd zero = %g\n\n",zero2)
19
20 y=poly(0,"y")
21 a2=input("Enter the value of coefficient of a=");
22 b2=input("Enter the value of coefficient of b=");
23 c2=input("Enter the value of coefficient of z=");
24
25 root1=((-b2)+sqrt((b2^2)-4*a2*c2))/(2*a2)
26 disp(root1,"1st pole =")
27 root2=((-b2)-sqrt((b2^2)-4*a2*c2))/(2*a2)
28 disp(root2,"2nd pole =")
29 disp('Transfer function = (s*(s+2))/(s^2+2*s+2)')
```

Experiment: 7

Read floating point numbers from a formatted file and sort it in ascending order and save in another text file

Scilab code Solution 7.0 Experiment Number 7

```
1 //Aim:Read floating point numbers from a formated
     file and sort it in asending
2 //     order and save in another text file
3 //Software version Scilab 5.5.2
4 //OS Windows 7
5
6 clear;
7 clc;
8 fid=mopen("C:\Program Files\scilab -5.5.2\contrib\
     text.txt","r")//reading the file
9 if(fid==-1)
10     error("cannot open file\n")
11 else
12     printf("Scilab can read selected file\n")
13 end
```

```
num_yet=0
done_yet=0
while(done_yet==0)
    [num_read,val(1),val(2),val(3),val(4)]=mfscanf(
       fid,"%f%f%f%f")
    if(num_yet<=0)
        done_yet=1;
end
end
file("close",fid)
printf("The floating point numbers from a formated
   file\n")
disp(val)
l=length(val)

printf("Values in ascending order copied in another
   text file with name new in same directory\n")
for i=1:(l-1)
    for j=1:(l-1)
        if(val(j)>val(j+1))
            temp=val(j)
            val(j)=val(j+1)
            val(j+1)=temp
        end
    end
end
disp(val)
fis=mopen("new.txt","w")                          //
   creating the new file
mfprintf(fis,"%f\n%f\n%f\n%f",val(1),val(2),val(3),
   val(4))
file("close",fis)
```

check Appendix AP 1 for dependency:

text.txt

Experiment: 8

Plot a full wave rectified waveform using Fourier series.

Scilab code Solution 8.0 Experiment Number 8

```
1  //Aim:Plot a full wave rectified waveform using
       Fourier series
2  //Software version Scilab 5.5.2
3  //OS Windows 7
4
5  clc;
6  clear;
7  funcprot(0);                          //creating funtion
       for Fourier series
8  function y=f(x),y=1/%pi*sin(x),endfunction
                  //calculating a0
9      a0=intg(0,%pi,f)              //integrating from 0 to
           %pi for calculating a0
10 function [a0,A]=fourier(l,n,f)
11     for i=1:n
12         function b=f1(x,f)
13             b=f(x)*cos(i*%pi*x/l)*sin(i*%pi*x/l);
                   //declaring function An
14         endfunction
```

```
15          A(i)=1/l*intg(0,%pi,f1);            //
               calculating value of An
16      end
17      function series=solution(x)
18          series=a0/2
19          for i=1:n
20              series=series+A(i)*cos(i*%pi*x/l);    //
                   suming the serice
21          end
22      endfunction
23      x=0:0.1:6*l;
24      plot2d(x,10*(solution(x)-0.068));
25      title("output voltage of full wave rectifier")
26      ylabel("amplitude")
27      xlabel("time")
28  endfunction
29  deff('a=f(x)','a=x')
30  [a0,A]=fourier(%pi,1,f)         //calling function by
       asinging value of l and n
```

Appendix

Scilab code AP 1

```
1 33.22
2 462.
3 27.11
4 383.22
```

text file for Experiment number 7

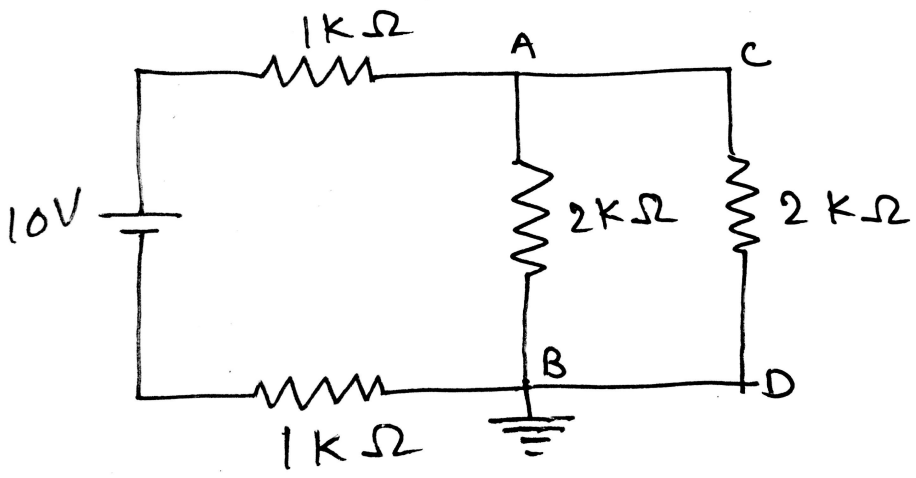

Circuit Diagram For Experiment 5